www.lmotion.ru lmotion-mail@ya.ru Тел.: (495)-921-34-60

# Slides and positioning tables

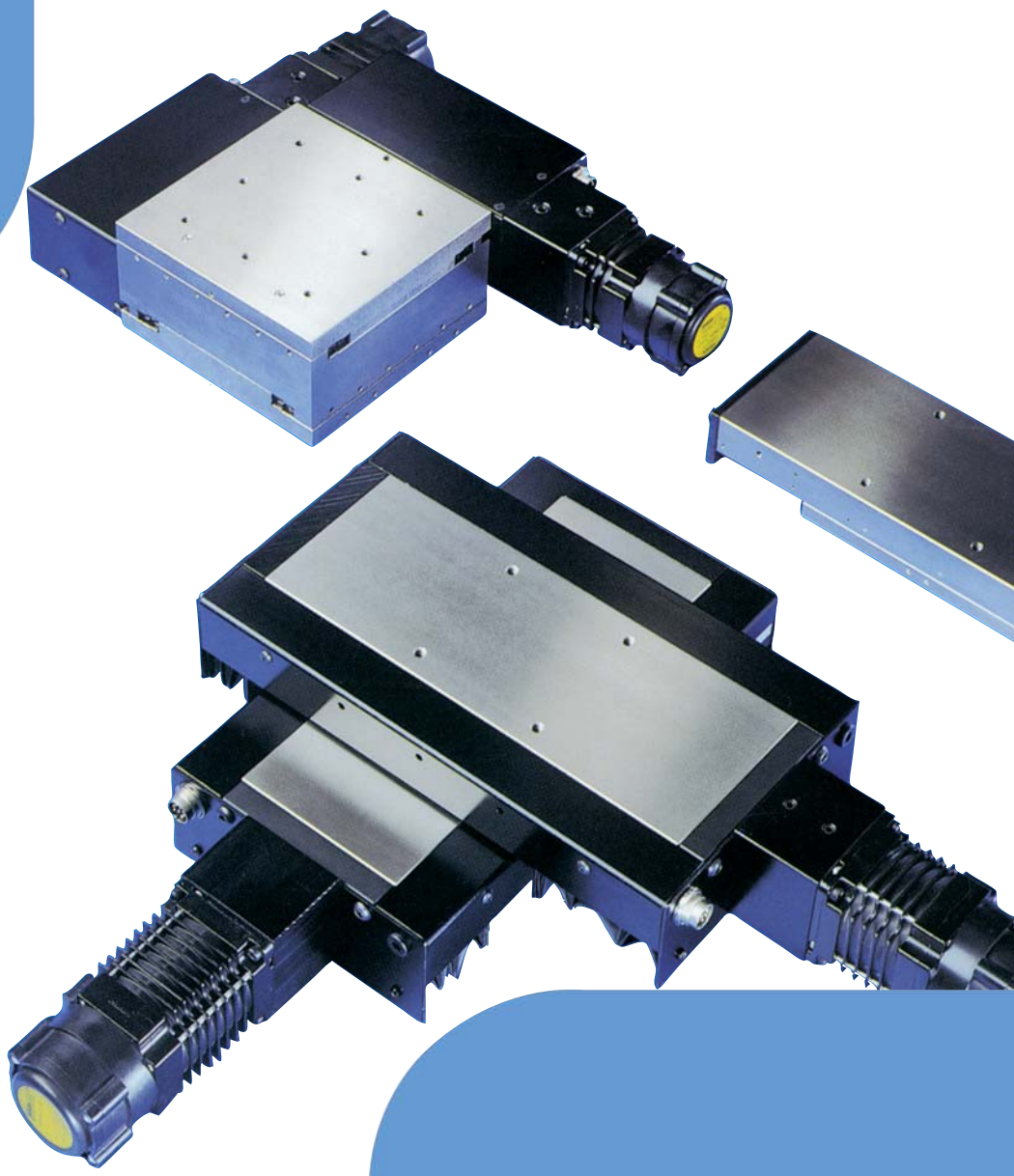

www.lmotion.ru lmotion-mail@ya.ru Тел.: (495)-921-34-60

The SKF® brand now stands for more than ever before, and means more to you as a valued customer.

While SKF maintains its leadership as the hallmark of quality bearings throughout the world, new dimensions in technical advances, product support and services have evolved SKF into a truly solutions-oriented supplier, creating greater value for customers.

These solutions encompass ways to bring greater productivity to customers, not only with breakthrough application-specific products, but also through leading-edge design simulation tools and consultancy services, plant asset efficiency maintenance programmes, and the industry's most advanced supply management techniques.

The SKF brand still stands for the very best in rolling bearings, but it now stands for much more.

**SKF – the knowledge engineering company**

# Content


**Introduction**
2 Introduction

**Product overview**
4 Positioning tables and slides

**Technical information**
8 Selection of suitable slide system
10 Selection tables for SKF slides and positioning tables
12 Accuracies
16 Load-carrying capacity and life
17 Motor design and service life of screw
18 Characteristic features, speeds, preloading and stiffness
19 Materials, operating temperatures, environment and friction
20 Lubrication and masses

**Design and characteristic features**
21 Dovetails slides and tables
30 Precision slides and positioning tables

**Tables of dimensions**
22 Dovetail slides
34 Precision slides: detailed design
40 Precision slides with end plates - RE
44 Precision tables for manual operation - RS
52 Precision tables for motor drive - RSS
60 Precision tables for motor drive, sealed
64 Selection of screw, screw speeds and abutment dimensions

**Accessories - dovetail slides**
27 Locking device - AR1
27 Mounting bracket
28 Additional drill hole pattern

**Precision slides**
66 Additional drill hole pattern
68 Locking device - AR2
68 Mounting bracket
69 Limit and reference switches
70 Cross table assembly
72 Base plate
73 Thick slide top
73 DT slots
74 Linear measurement system
76 Standard motor fitting

**Ordering codes**
80 Order codes
85 Performance specification

www.lmotion.ru lmotion-mail@ya.ru Тел.: (495)-921-34-60

# Preface

This catalogue presents the modular system of SKF slides and positioning tables. They provide simple and economical solutions to guidance and drive needs in the most varied applications.

These applications include machine tools, processing, handling systems, special machines, appliances, and measuring and testing devices.

For applications in which these slides and positioning tables cannot be used, other SKF slide systems are available (please see section entitled "Selection of suitable slide system", pages 8 - 11).

If you wish to have information on the slides not contained in this catalogue, please ask for the relevant catalogue, or contact our technical advisory service. We shall then send you the required information or work out a proposal to meet your needs.

This catalogue is based on the present state of production. We reserve the right to make changes, so that users can enjoy the direct benefits of constant technological progress.

Earlier publications on this product series with data which differs from that given in this catalogue are no longer valid. This catalogue uses SI-units laid down in the international unit system (Système International d'Unités).

Delivery is subject to the delivery and payment conditions indicated in our offers and order confirmations.

www.lmotion.ru lmotion-mail@ya.ru Тел.: (495)-921-34-60


# Positioning tables and slides

## Dovetails slides

**Dovetail tables** (Fig. 1)
**for manual operation**
**with micrometer knurl SSM**
**with crank handle SSK**

- slide top longer than base plate
- stroke limited by end plates
- guide covered by the longer slide top
- hand operation by lead screw with play.

Fig. 1

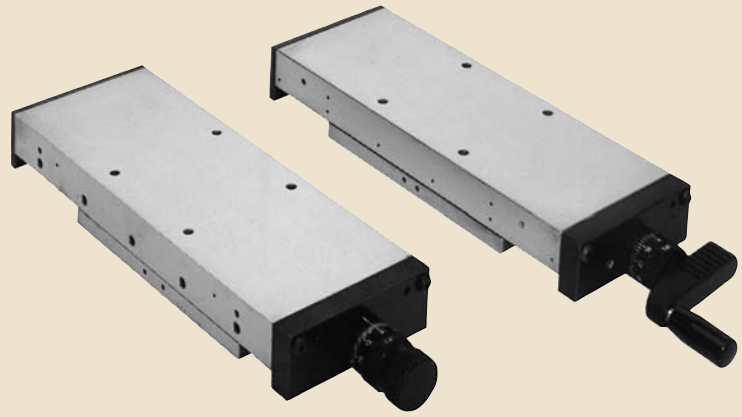

SSM slide SSK slide

## Precision slides

**Rail guide systems** (Fig. 2)
Precision slides are available as standard in three different rail guide systems:

**R - Crossed rollers**
**N - Needle rollers**
**P - Dry sliding liner**

Fig. 2

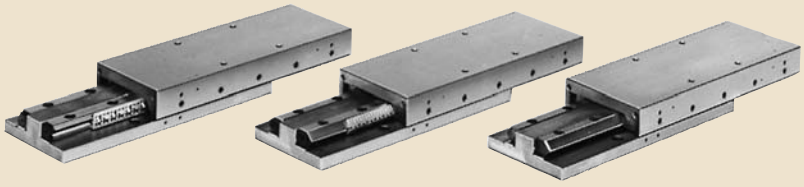

R - guide N - guide P - guide

www.lmotion.ru lmotion-mail@ya.ru Тел.: (495)-921-34-60

Precision slides (Fig. 3)
with endplates RE - NE- and PE-

- slide top longer than base plate
- stroke limited by endplates
- guide covered by the longer slide top
- no drive

Fig. 3

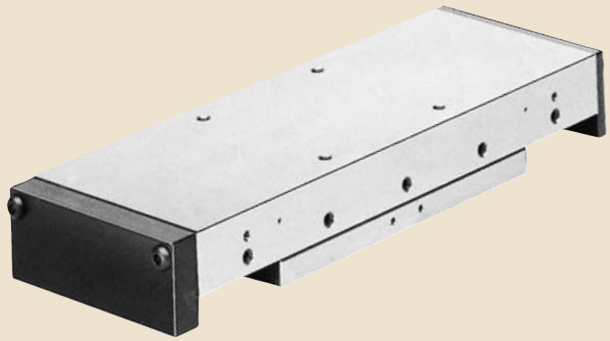

RE slide

Precision tables (Fig. 4)
for manual operation with micrometer knurl RSM-NSM-PSM
with hand crank RSK-NSK-PSK

- slide top longer than base plate
- stroke limited by endplates
- guide covered by the longer slide top
- manual operation by lead screw with play.

Fig. 4

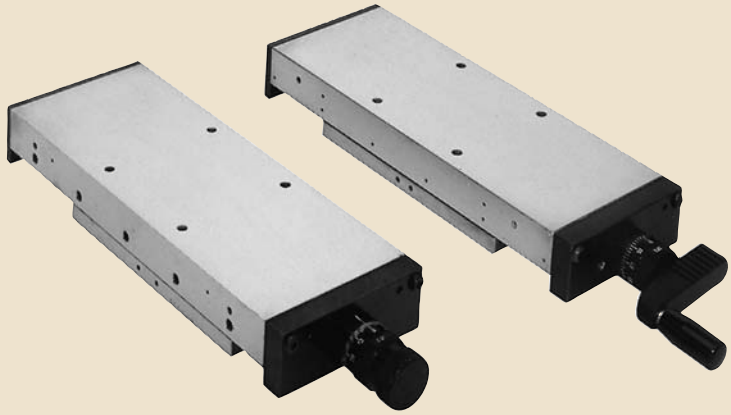

RSM slide RSK slide

Precision tables (Fig. 5)
for motor drive RSS-NSS-PSS

- slide top longer than base plate
- strike limited by endplates
- guide covered by bellows
- for motor drive with high-precision planetary roller screw
- available with motor flange and coupling
- available with mechanical or inductive limit switch
- available with linear encoder
- available with motor and control unit

Fig. 5

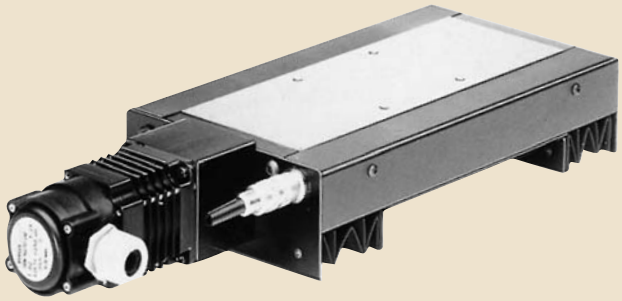

RSS slide

www.lmotion.ru lmotion-mail@ya.ru Тел.: (495)-921-34-60

**Precision cross tables** (Fig. 6)
**Precision tables for motor drive fitted to cross tables**

- in assembly types KN, KU, KX

Fig. 6

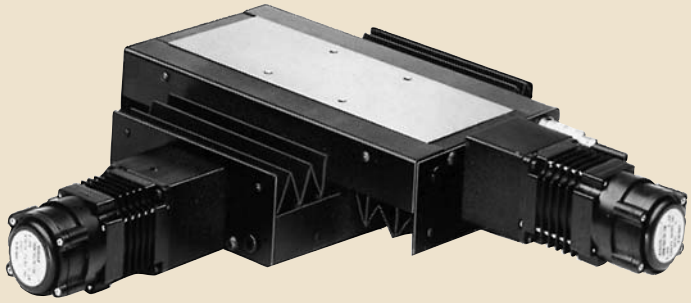

Assembly type KU

Precision tables (Fig. 7)
for motor drive, sealed
RSAS-NSAS-PSAS

Identical with the precision slides in the RSS, NSS and PSS series, but

- guide sealed by additional base plate and wipers
- air supply for additional air locking
- motor fitting on side with 1:1 toothed belt drive.

Fig. 7

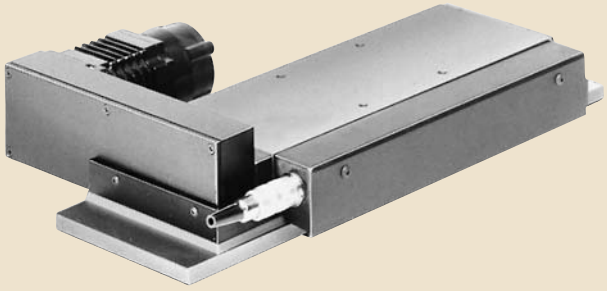

RSAS slide

www.lmotion.ru lmotion-mail@ya.ru Тел.: (495)-921-34-60

## Compact cross tables

### Compact cross tables (Fig. 9) open design TO

- two-coordinate cross table with equal strokes
- compact design
- crossed roller guides
- no drive
- can be provided with locking device

Fig. 9

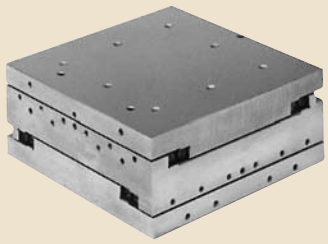

Compact cross table TO

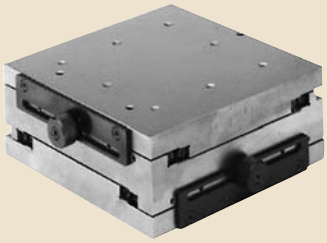

Compact cross table TO with AR 3

### Compact cross tables (Fig. 10) with micrometer attachment TS

- two-coordinate cross table with equal strokes
- compact design
- crossed roller guides
- with micrometers fitted in parallel to the side, spring loaded
- can be provided with locking device

Fig. 10

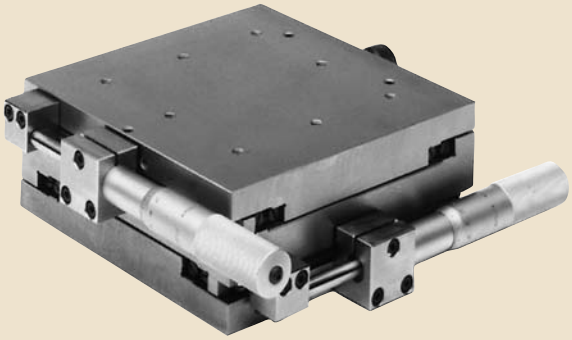

Compact cross table TS

### Compact cross tables (Fig. 11) for motor drive TSS

- two-coordinate cross table with equal strokes
- compact design
- crossed roller guides
- for motor drive with high-precision planetary roller screw
- available with motor flange and clutch
- available with mechanical or inductive limit switches
- available with linear encoder
- available with motor and control unit

Fig. 11

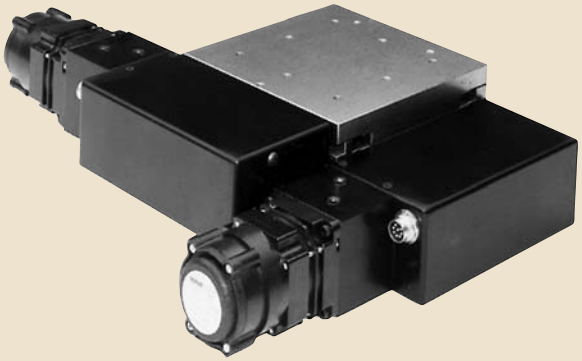

Compact cross table TSS

www.lmotion.ru lmotion-mail@ya.ru Тел.: (495)-921-34-60


# Selection of a suitable slide system

Slides or tables with suitable guidance systems are available in the SKF product range for nearly all positioning operations.

## SKF slide and table guidance systems

Table 1

| Catalogue No. | Description | Guide | Symbol |
|---|---|---|---|
| 4218 | Linear ball bearing | Linear ball bearings | 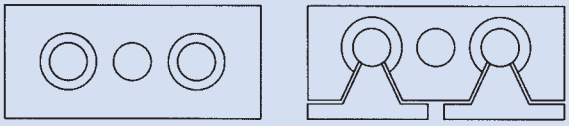 |
| 4115 | Profile rail slides | Profile rails | 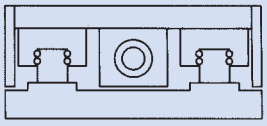 |
| 4228 | Standard slides | Crossed rollers | 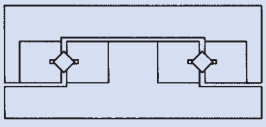 |
| | Dovetail slides | Dovetail | 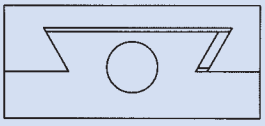 |
| | | Crossed rollers | 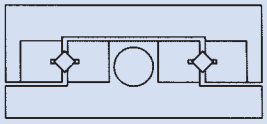 |
| 4211 | Precision slides | Needle rollers | 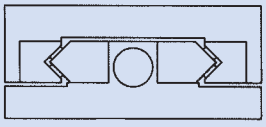 |
| | | Dry sliding liner | 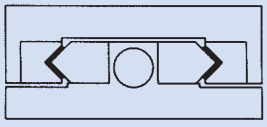 |
| | Compact cross tables | Crossed rollers | 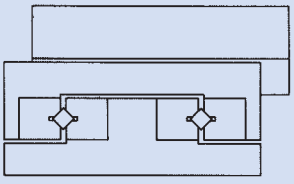 |

www.lmotion.ru lmotion-mail@ya.ru Тел.: (495)-921-34-60

Each of these types of guides has characteristic features which make them especially suited for particular guidance operations. It is not possible to give generally applicable rules for the selection of a table system as in most cases several factors have to be taken into account and weighed against one another.

The following criteria can be of considerable assistance in making a selection.

Selection assistance
The following are the most important criteria for the selection of a suitable slide or table system:

- stroke
- load-carrying capacity
- running accuracy
- speed
- acceleration
- preloading of guide
- stiffness
- friction
- stick slip
- damping
- sensitivity to dirt fallout
- relationship of stroke to overall length
- price

Table 2 on pages 10 and 11 shows the degree to which the various types of slides and tables fulfil the individual criteria. The last column indicates what is meant by 100 % fulfilment.

The degree of fulfilment by the "standard slides" is basically the same as that of the "precision slides with crossed roller guides".

The following slide types are contained in this Catalogue:

- Remove space slides - S
- Precision slides
  with crossed roller guides - R
  with needle roller guides - N
  with dry sliding liner guides - P
- Compact cross tables - T

The other SKF slides are shown in the catalogues listed in table 1.

www.lmotion.ru lmotion-mail@ya.ru Тел.: (495)-921-34-60

# Selection table for SKF positioning slides and tables

Table 2

| Slide design / Assessment criteria | Linear ball bearing slide 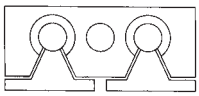 LZ | Profile rail slide 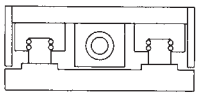 LLB | Dovetail slide 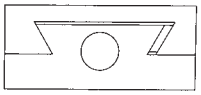 S |
|---|---|---|---|
| Stroke | | | |
| Load-carrying capacity | | | |
| Running accuracy | | | |
| Speed | | | |
| Acceleration | | | |
| Preloading of guide | | | |
| Stiffness | | | |
| Friction | | | |
| Stick slip | | | |
| Damping | | | |
| Sensitivity to dirt fallout | | | |
| Stroke/Overall length | | | |
| Price | | | |

www.lmotion.ru lmotion-mail@ya.ru Тел.: (495)-921-34-60

Table 2

| Precision slides with: | | | Compact cross table | Degree of Fulfilment 100 % |
|---|---|---|---|---|
| Crossed roller guides 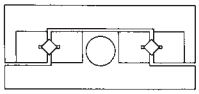 R | Needle roller guides 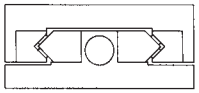 N | Dry sliding liners 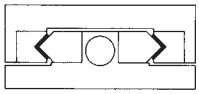 P | 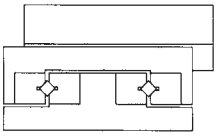 T | |
| | | | | ≥ 2,5 m |
| | | | | ≥ 150 kN |
| | | | | ≤ 3 µ/300 mm |
| | | | | ≥ 200 m/min |
| | | | | ≥ 150 m/m$^2$ |
| | | | | high |
| | | | | high |
| | | | | ≤ µ 0,002 |
| | | | | none |
| | | | | high |
| | | | | insensituve |
| | | | | 1 : 1 |
| | | | | low |

www.lmotion.ru lmotion-mail@ya.ru Тел.: (495)-921-34-60

# Accuracies

The overall accuracy with which a given object can be positioned in space depends on a number of factors relating to the individual axes. These include:

- **Straightness** of the slide movement upwards and sideways
- **Rotation** of the slide movement through pitch and yaw angles
- **Perpendicularity** of the individual axes to one another
- Positioning accuracy in the direction of feed of the individual axes with the following characteristics:
  - Positioning tolerance
  - Width of backlash
  - Positioning variation
- **Temperature difference**

The straightness, rotation and perpendicularity properties of a slide or table are greatly influenced by the mechanical stability and stiffness of the guide and the slide components.

In combination with stable and high-precision slide parts, the crossed or needle roller guides in the SKF precision slides and compact cross tables ensure that assemblies are extremely precise.

The positioning accuracy of a table is influenced by the choice of drive type. All SKF tables can be fitted with preloaded planetary roller screws to obtain the best performance.

All accuracy data in this catalogue is valid only for an unloaded individual slide of standard quality P10 (the superior accuracies P5 and P2 can be obtained on request) which, with all of its attachment screws, is fastened to a 100 % flat surface, measured at constant room temperature.

In a multiaxis unit consisting of precision slides, the accuracies of the individual slides add up either positively or negatively. There is also the elastic deformation of the unsupported and partly supported axes.

Information on the probable accuracies of a particular multiaxis unit, including one under load, can be obtained on request.

The values given in Table 1 for the X and Y axes apply only to compact cross tables.

**Straightness**
Definition according to VDI 2617, Sheet 3.

The definition and type of measurement of the straightness of movement of SKF slides is shown in Figs. 12 and 13. It is important to note that the data given in our catalogue does not apply to the table surface directly. Conditioned as they are by the measuring design (e. g. laser optics), all accuracy data relates to one point on the moving slide top which is located at a distance of “a” above the table (see Figs. 12 and 13).

Fig. 12
Straightness - Height

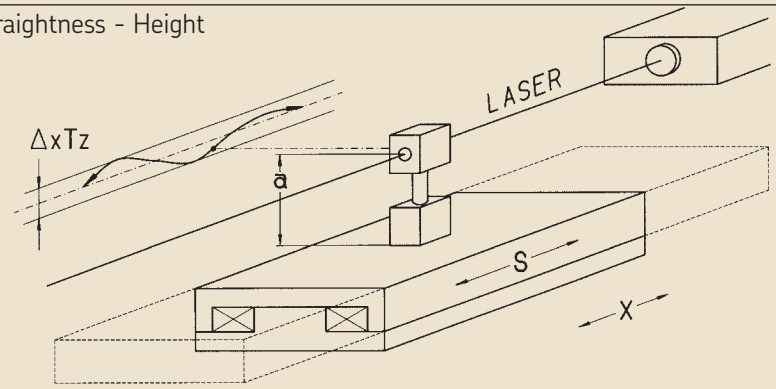


xTz = Straightness deviation, from example of an X-axis, measured in direction Z
a = Measuring height across the table surface ~ 100 mm

Fig. 13
Straightness - Side

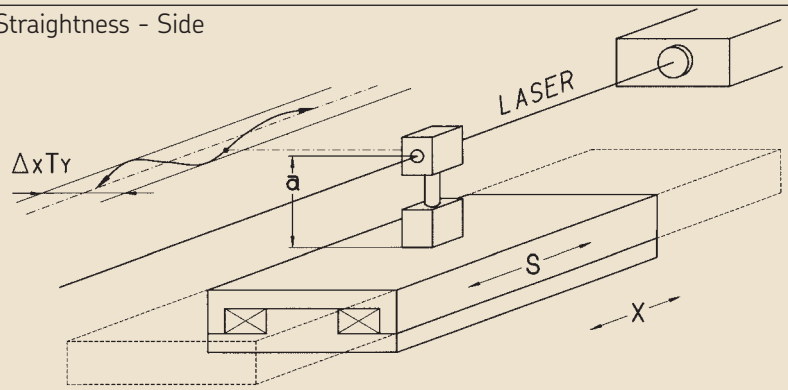


xTy = Straightness deviation, from example of an X-axis, measured in direction Y
a = Measuring height across the table surface ~ 100 mm

www.lmotion.ru lmotion-mail@ya.ru Тел.: (495)-921-34-60

**Rotation**
Definition according to VDI 2617, sheet 3.

The definition and types of rotation during movement of slides are shown in Figs. 14 and 15.

**Pitch Angle** (Fig. 14)
Pitch angle indicates the maximum angular displacement of rotation around the horizontal transverse axis during slide movement. This angle is caused by the waviness in the straightness height plane (see also Fig. 16).

Fig. 14

Rotation around transverse axes
Pitch angle

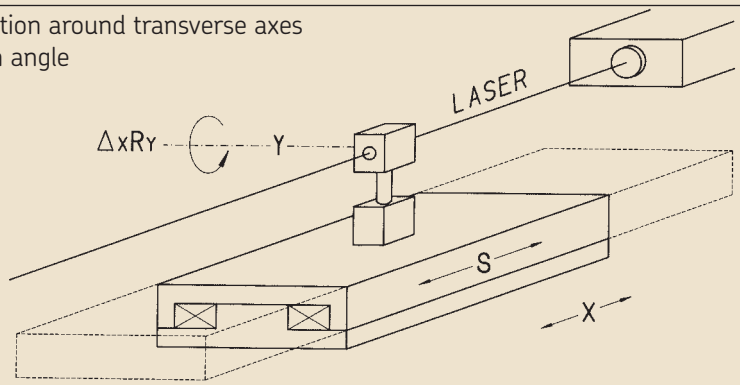


xRy = Pitch angle from example of the X-axis
(Rotation of the X-axis around the transverse Y-axis)

**Yaw angle** (Fig. 15)
Yaw angle indicates the maximum angular displacement of rotation around the vertical transverse axis during slide movement. This angle is caused by the waviness in the straightness - slide plane (see also Fig. 16).

Fig. 15

Rotation around transverse axes
Yaw angle

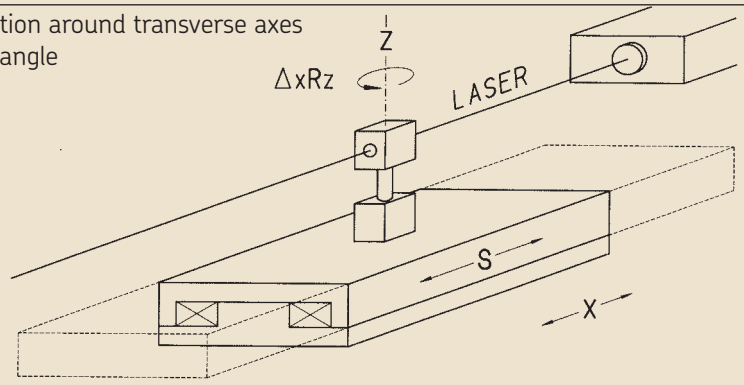


xRz = Yaw angle from example of the X-axis
(Rotation of the X-axis around transverse axis Z)

The relationship between straightness and rotation, from the example of an X axis, is shown in Fig. 16.

Fig. 16

Relationship between: Straightness-Height with pitch angle
Straightness-Side with yaw angel

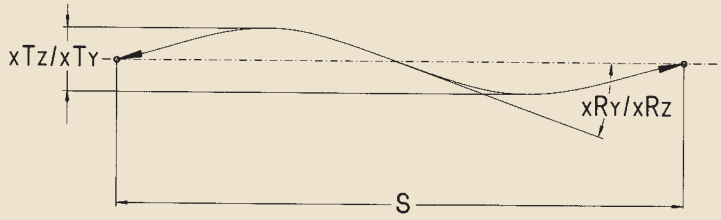


xTz = Straightness deviation of the X-axis measured in direction Z
xRy = Pitch angle of the X-axis around the Y direction

xTy = Straightness deviation of the X-axis measured in direction Y
xRz = Yaw angle of the X-axis around direction Z

www.lmotion.ru lmotion-mail@ya.ru Тел.: (495)-921-34-60

**Perpendicularity**
Definitions according to VDI 2617, sheet 3.
Perpendicularity given is only for cross tables consisting of precision slides or tables and for compact cross tables.

For SKF precision slides and compact cross tables made of standard material of P10 quality, maximum permissible values will be found as follows in Table 1 for

- Straightness-Height Tz
- Straightness-Side Ty
- Rotation R
- Perpendicularity W

(superior accuracies can be supplied on request).

**Positioning accuracy**
in the direction of feed
Definitions according to VDI/DGQ 3441.

1. **Parameters for assessing positioning accuracy:**
   This accuracy is assessed with parameters ascertained separately for each axis (slide). Fig. 17 shows the relationship between the characteristics described below.

1.1 **Positioning tolerance**
Position tolerance is the guaranteed permissible total deviation of a slide in the direction of feed. The total deviation ascertained (positioning uncertainty P) must therefore be smaller than the permissible positioning tolerance.

1.2 **Positioning uncertainty P** (Fig. 18)
Positioning uncertainty is the total deviation ascertained. It is determined by taking account of the parameters of backlash width U, positioning variation Ps and positioning deviation Pa. In this way it covers the systematic and chance deviations.

1.3 **Backlash width** (Fig. 18)
Backlash width is a systematic deviation and is determined separately for each measuring position. It is the difference between the mean values of the measuring results from both starting directions.

1.4. **Positioning variation Ps** (Fig. 18)
Positioning variation describes the effect of chance deviations in each position. It is obtained statistically.

1.5. **Positioning deviation** (Fig. 18)
As a systematic deviation, positioning deviation is the maximum difference of the mean values for all positions.

Fig. 17

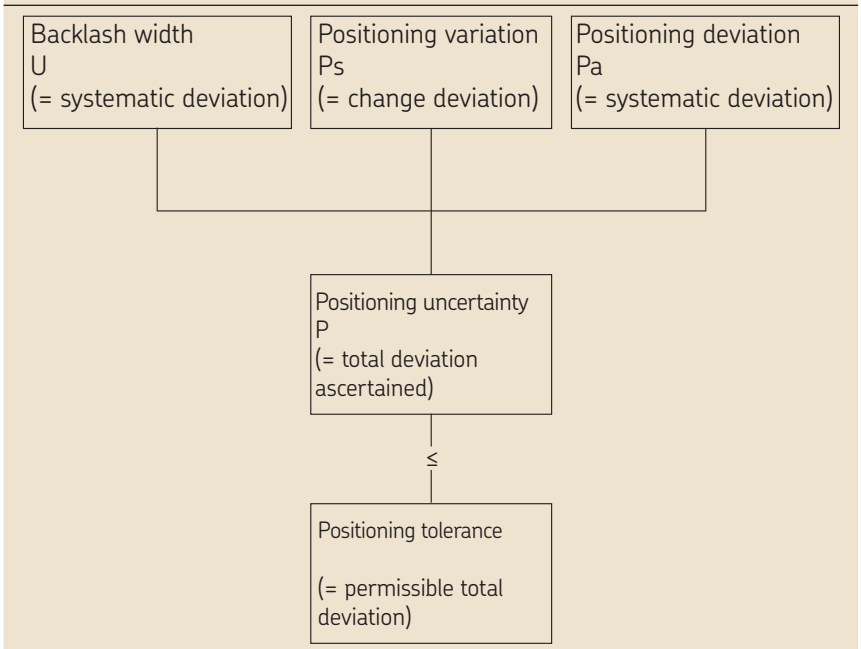


Fig. 18

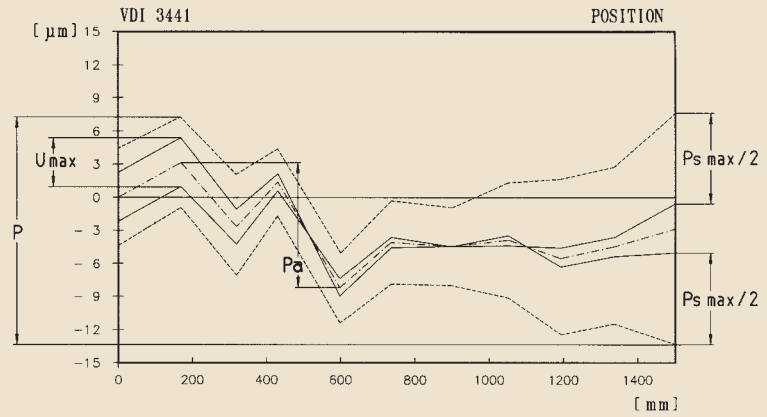

www.lmotion.ru lmotion-mail@ya.ru Тел.: (495)-921-34-60

2. **Ascertaining the parameters**
The parameters are ascertained by approaching several measuring points in the positioning range of the slide from each travel direction at least five times. Many measurements are obtained in this way. They give the deviation of each measuring point from the target positions prescribed by the control unit.

From these individual measurements, which are statistically assessed in accordance with VDI/DGQ 3441, the following parameters P, U, Ps and Pa are calculated and assessed in graph form (Fig. 18).

On request, all slides or table systems, which are delivered by SKF ex-works complete with motors and control units, can be measured by laser and the parameters per axis statistically assessed and recorded in diagram and tables.
Depending on various drive and measuring systems, the maximum permissible values of
- positioning tolerance
- backlash width
- positioning variation

for the SKF precision slides and compact cross tables are shown in table 2.

Table 1

| | | Stroke [mm] | | | | |
|---|---|---|---|---|---|---|
| **Accuracy (P10)** | | 100 | 200 | 300 | 400 | 500 |
| **Straightness-Height Tz** | [µm] | 5 | 6 | 7 | 8 | 9 |
| **Straightness-Side Ty** | [µm] | 4 | 4 | 5 | 5 | 5 |
| **Rotation R** | [mrad] | | | 0,1 | | |
| **Perpendicularity W** (only for cross tables) | [mrad] | | | 0,03 | | |

Table 2

| | | Stroke [mm] | | | | |
|---|---|---|---|---|---|---|
| **Drive design** | **Positioning accuracy** [µm] | 100 | 200 | 300 | 400 | 500 |
| I | Positioning tolerance[1)] | 28 | 35 | 43 | 45 | 47 |
| | Backlash width U | | | 4 | | |
| | Positioning variation Ps/2 | | | 8 | | |
| II | Positioning tolerance[1)] | 16 | 23 | 31 | 33 | 35 |
| | Backlash width U | | | 4 | | |
| | Positioning variation Ps/2 | | | 2 | | |
| III | Positioning tolerance[1)] | | | 3 | | |
| | Backlash width U | | | 2 | | |
| | Positioning variation Ps/2 | | | 1 | | |

[1)] = no compensation made for linear pitch error e (p)

3. **Drive design**

I: Open bearing control circuit with five-phase stepping motor in full step operation, with 4 mm screw lead.

II: Closed position control circuit with DC or AC motor and attached encoder (line number 500) with 4 mm screw lead and fourfold assessment by control unit.

III: Closed bearing control circuit with DC or AC motor and linear measurement system LMS (20 µm period division) and fivefold interpolation and fourfold assessment by the control unit.

Superior accuracies can be obtained by changing the drive design, for example by:
- reducing screw lead
- increasing the grating number of the encoder
- increasing the interpolation of the linear measurement system signal
- using linear measurement systems with a small grating pitch
- compensating for linear pitch error in the control unit (only for I and II).

**General tolerances**
Unless otherwise indicated, general tolerances conforming to ISO 2768 -mk apply to all other slide dimensions.

www.lmotion.ru lmotion-mail@ya.ru Тел.: (495)-921-34-60

# Load-carrying capacity and life

**Load-carrying capacity**
**Dovetail slides**
The load rating $C_{eff}$ indicated in the tables is the maximum permissible load $F_{dyn}$ which may occur during movement. The indicated load rating $C_o$ is the maximum permissible load $F_{stat}$ which may occur when the slide is not moving.

However the values $C_{eff}$ and $C_o$ are valid only if the load $F_{dyn}$ or $F_{stat}$ is applied as a surface load vertically and centrally from above, and distributed across the surface B x $L_2$ (slide width x length of the slide bottom). Reductions must be made if there are additional moment loads. Please call on us for assistance. The values $C_{eff}$ and $C_o$ given in the tables are valid for the standard GG25 material of slides. With aluminium slides both values must be reduced by 40 %.

**Precision slides and compact cross tables**
Calculation of load-carrying capacity is based on the principles laid down by ISO for the general calculation of rolling bearings. The dynamic load rating $C_{eff}$ given in the Tables is used for the calculations of tables running under load. However the static load rating $C_o$ should not be exceeded. The static load rating is defined as that the load which produces a maximum Hertz-calculated stress of 4 000 N/mm² in the area of contact between the rolling element and the raceways.

In order to ensure sufficient operating reliability, a safety factor So has already been included (according to type) in the $C_o$ data in the catalogue tables as follows:

R-slides $S_o$ = 3 - 6
N-slides $S_o$ = 6 - 15
T-slides $S_o$ = 4

These factors need to be increased correspondingly when slides are subjected to shocks and when high degrees of running accuracy are required.

In general the values $C_{eff}$ and $C_o$ are valid only if the load is applied centrally as a surface load evenly distributed across the surface B x $L_{TW}$ (slide width x effective cage length).

Reductions must be made if there are additional moment loads. Please call on us for assistance.

If the load is evenly distributed, as described above, the life of a rolling bearing slide can be determined from the following life equations:

(1) $$L_{10s} = c_1 \cdot \frac{5 \cdot 10^7}{S} \cdot \left(\frac{C_{eff}}{f_s \cdot F}\right)^{10/3}$$

or

(2) $$L_{nh} = c_1 \cdot \frac{5 \cdot 10^7}{S \cdot n \cdot 60} \cdot \left(\frac{C_{eff}}{f_s \cdot F}\right)^{10/3}$$

Where
$L_{10s}$ = rated life in double strokes from one end position to the other and back

$L_{nh}$ = rated life in operating hours

$C_{eff}$ = effective dynamic load rating of a slide

F = constant load vertically on the table surface, evenly distributed within area BxLTW

S = effective stroke

n = stroke frequency, $min^{-1}$ (Number of double strokes per min.)

$c_1$ = factor for reliability. $c_1$ = 1 for a reliability of 90 % probability, according to ISO recommendation. For higher reliabilities, please obtain the relevant $c_1$ values from the ball bearings or rail guides catalogue.

$f_s$ = Factor for effective stroke length (as in table 3)

Table 3

| $S/L_{Tw}$ | $f_s$ |
|---|---|
| 0,2-0,3 | 1,6 |
| 0,3-0,5 | 1,4 |
| 0,5-0,7 | 1,2 |
| 0,7-1 | 1,1 |
| >1 | 1 |

3) $L_{Tw} = z \cdot t_1$ or $z \cdot t_2$

In which
$L_{Tw}$ = load-bearing cage length

z = number of load-bearing rolling elements (see slide tables)

$t_1$ = pitch of rollers

$t_2$ = pitch of needle rollers (re $t_1/t_2$, see pages 35-40).

# Motor design and service life of screw

## Precision slides and compact cross tables

(4) $$M_V = \frac{1}{i} \cdot \left( M_S + \frac{F_A \cdot p}{5\,027} \right) \text{ [Nm]} < M_N$$

(5) $$n_M = \frac{6 \cdot 10^4 \cdot v \cdot i}{p} \text{ [1/min]}$$

(6) $$t_B = \frac{v}{a} \text{ [s] oder } t_B = \frac{S_B}{500 \cdot v} \text{ [s]}$$

(7) $$S_B = 500 \cdot v \cdot t_B \text{ [mm]}$$

(8) $$t_G = 2 \cdot t_B + \frac{S - 2\,S_B}{1\,000 \cdot v} \text{ [s]}$$

(9) $$J_T = \frac{m_T \cdot p_2}{3.95 \cdot 10^7} \text{ [kgm}^2\text{]}$$

(10) $$J_R = \frac{d_o^4 \cdot l}{1.3 \cdot 10^{12}} \text{ [kgm}^2\text{]}$$

(11) $$J = J_M + J_K + \frac{J_T + J_R}{i^2} \text{ [kgm}^2\text{]}$$

(12) $$M_B = \frac{J \cdot n_M}{7.64 \cdot t_B} \text{ [Nm]}$$

(13) $$M_M = M_B + M_V \text{ [Nm]} < M_l < M_a$$

## Determination of screw life

(14) $$L_{ns} = \frac{p^4}{1.27 \cdot 10^8} \cdot \left( \frac{C_a}{M_V \cdot i} \right)^3 \text{ [m]}$$

(15) $$L_{10s} = \frac{p^4}{2.54 \cdot 10^5 \cdot S} \cdot \left( \frac{C_a}{M_V \cdot i} \right)^3 \text{ [DH]}$$

(16) $$L_{10h} = \frac{p^4}{1.52 \cdot 10^7 \cdot S \cdot n} \cdot \left( \frac{C_a}{M_V \cdot i} \right)^3 \text{ [h]}$$

Where:

- $a$ = acceleration/deceleration [m/s²]
- $C_a$ = dynamic load-carrying capacity of screw [N]
- $d_o$ = screw diameter (see page 64) [mm]
- $F_A$ = axial load in direction of feed [N]
- $i$ = poss. gear/belt transmission e. g. motor/screw speed
- $J$ = sum of moments of inertia [kgm²]
- $J_K$ = moment of inertia of coupling elements, e. g. coupling, transmission [kgm²]
- $J_M$ = moment of inertia of motor [kgm²]
- $J_R$ = rotatory moment of inertia of screw [kgm²]
- $l$ = screw length (see page 65) [mm]
- $L_{ns}$ = rated life of screw in m
- $L_{10s}$ = rated life of screw in number of double strokes
- $L_{10h}$ = rated life of screw in operating hours
- $M_a$ = max. permiss. slide driving torque
- $M_B$ = acceleration or braking torque [Nm]
- $M_l$ = max. permiss. dynamic torque of motor selected
- $M_M$ = max. motor torque required during acceleration [Nm]
- $M_N$ = Nominal torque of motor selected
- $M_S$ = slide idling speed torque
- $m_T$ = mass of linear moving parts [kg]
- $M_V$ = required motor torque at constant speed [Nm]
- $n$ = number of stroke movements from one end position to another and back [min⁻¹]
- $n_M$ = driving and motor speed [1/min]
- $p$ = screw lead (see page 64) [mm]
- $S$ = stroke [mm]
- $S_B$ = acceleration or braking distance [mm]
- $t_B$ = acceleration or braking time [s]
- $t_G$ = total time for one stroke [s]
- $v$ = feed rate [m/s]

www.lmotion.ru lmotion-mail@ya.ru Тел.: (495)-921-34-60

# Characteristic features, speeds, preloading and stiffness

## Specific features

### Dovetail slides
- robust guides
- high load-carrying capacity
- for high transverse accelerations which make use of guides with rolling elements impossible (e. g. vibrations, shocks).
- excellent vibration damping
- insensitive to dirt fallout
- low preload properties
- danger of stick slip

### Precision slides with R-N-P guides
A feature common to all three kinds of precision slide guides are rail guides for limited strokes.

Depending on type, crossed or needle rollers, which serve as rolling elements are housed in plastic or aluminium cages and move between the rails.

For rail guides with dry sliding liners, one of the two rails is laminated with plain bearing material based on PTFE, and the liner surface is ground. A hardened and ground steel rail serves as the opposing sliding area.

### R-rail guides with crossed roller assemblies
- robust guidance for most applications
- high load-carrying capacity
- excellent value for the price

### N-rail guides with needle roller assemblies
- greater dynamic load-carrying capacity
- greater stiffness
- more suited to short strokes
- less sensitive to shocks

### P-rail guides with dry sliding liners
- for high transverse accelerations which make use of guides with rolling elements impossible (e. g. vibrations, shocks).
- for high-frequency or extremely short strokes
- good emergency running properties
- insensitive to dirt fallout
- very good vibration damping properties
- low preload properties

For selection of the slide system which best suits your special application, please see the chapter entitled “Choice of suitable slide system”, pages 8 - 11.

## Permissible speeds and accelerations

### Dovetail slides
The dovetail slide permits speeds of up to 20 m/min with small loads and adequate lubrication.

### Precision slides and compact cross tables
The guides with rolling elements and limited travel incorporated in the R-N- and T-slides can be used with travel speeds of up to 2 m/s and with accelerations of up to 10 m/s$^2$.

Depending on load, the dry sliding liners incorporated in the P-slides permit higher speeds and virtually unlimited accelerations.

If your wish to have even higher speeds and accelerations, please use SKF linear ball bearing and profile rail slides.

## Preloading and Stiffness

### Dovetail slides
The dovetail guide is aligned with an adjustable gib strip attached to one side of the slide top by means of matched pressure screws with zero play. Alignment is carried out at the factory and the pressure screws are afterwards secured with lacquer. While the stiffness of the dovetail guide can be increased by higher preloading of this adjustable gib strip, this drastically increases the friction factor of the slide and hence the feed force required.

If a system with greater stiffness and hence greater accuracy is required, guides with rolling elements should be used. Slides form the “Precision slides” series have identical dimensions.

These slide types can be preloaded to a considerably greater extend without any great influence on feed forces.

### Precision slides
Depending on guide and slide size, the R- and N-slides are preloaded exworks with preload screws mounted on one side of the slide top. The preload is around 3 % to 10 % of the static load rating.

### Compact cross tables
Depending on guide an slide size, the T-slides are preloaded exworks with preload screws mounted on one side of the slide top. The preload is around 3 % to 5 % of the static load rating.

### All slide systems
The stiffness of all slide systems can be increased in each individual case by greater preloads. However it should be borne in mind that:
- The size of the increase in stiffness is limited by the need to preserve the stability of the slide components. This applies in particular to the R-, N- and P-slides because of the need to preserve the stability of the slide top.
- Depending on the kind of load, stiffness also depends on deflection of the unsupported slide parts. Thus there can be an improvement if slides with a thick top are used.
- An increased in preloading is at the expense of ease of operation and even running.

Any change in preloading should be carried out only at our works.

www.lmotion.ru lmotion-mail@ya.ru Тел.: (495)-921-34-60

# Materials, operating temperatures, environment and friction

## Materials

The slide components are manufactured as standard from the following materials:

### Dovetail slides

- Slide top and base:
  Standard: GG25 (cast iron)
  On request: hardanodized aluminium
  On request: GG25 chemically nickelplated, with PTFE coating as corrosion-resistant type.
- Endplates:
  In black anodized aluminium

### Precision slides and compact cross tables

- Guide rails:
  Tool steel 90 MnCrV9 (1.2842) hardened
- Rolling elements:
  Carbon chromium steel 100Cr6 (1.3505) hardened
- Cages:
  - R-slides dimension 50-200: plastic PA 12
  - R-slides dimension 300: aluminium
  - N-slides dimension 100 plastic PA 12
  - N-slides dimension 150-400: aluminium
  - T-slides: plastic PA 12
- Precision slides: top and base:
  Standard: GG25 (cast iron)
  On request: black anodized aluminium
- Compact cross tables:
  top and base:
  Standard: GG25 chemically nickel-plated
  On request: black anodized aluminium
- Other components for all systems: black anodized aluminium.

On request and when an order is being placed, slides can be made from other materials for precision slides and compact cross tables, e. g. stainless steel or acid-resistant or antimagnetic materials.

## Permissible operating temperatures

### S-, R-, N- and T-slides

Standard: -30 °C to +80 °C

### P-slides

Standard: -40 °C to +80 °C

### Dovetail slides only:

With special lubrication: -50 °C to +120 °C

### Special ambient influences

Compact cross tables can also be specially designed for clean-room and high-vacuum applications

## Friction

### Dovetail slides

As with all slides, friction depends greatly on:

- load
- speed
- lubrication

With an average load, adequate lubrication, and a speed of > 0,2 m/min, a coefficient of friction of between 0,1 and 0,15 can be expected. At lower speeds stick slip occurs. To avoid this, slides with rolling element guides should be used, e. g. R-slides or dry sliding liners P-slides.

### Precision slides and compact cross tables

All guides used operate without stick slip. The coefficient of friction of the R- and N-guides lies between 0,003 and 0,005 with standard light greasing.

For sealed slides of design RSAS-NSAS, the coefficients of friction are considerably greater, as the rubbing action of the wipers is added to the friction in the rail guide itself. These slides also have a high starting friction.

The coefficient of friction of the P-slides depends on load and speed.

For lubricated operating conditions it is:

- 0,08-0,15 for light loads and at low speeds (< 10 mm/min) and
- 0,04-0,0008 for average loads and higher speeds.

www.lmotion.ru lmotion-mail@ya.ru Тел.: (495)-921-34-60

# Lubrication and masses

## Lubrication

### Dovetail slides

Dovetail slides are provided with lubricating nipples on both sides on the bottom. The guide receives an adequate supply of oil from corresponding distribution holes and lubricating slots.

Oils with viscosities in the ISO VG 68-100 range or grease of Class 2 consistency with high-pressure additives should be used for lubrication.

Examples of oils:
- Shell Tonna 68
- Klüber Lamora Super Paladd 100

Examples of greases:
- SKF LGEM2
- Klüber Centoplex 2 EP

The slides are lightly lubricated exworks but should be lubricated before assembly and initial operation.

### Precision slides and compact cross tables

The guides and screws of SKF precision slides are lightly greased exworks with SKF grease type LGMT2, a multipurpose lithium-based grease which also serves as protection against corrosion. It can be used in all standard applications.

For applications involving heavy loads, severe vibration, and high acceleration, we recommend use of a grease with high-pressure additives, for example, LGEP2. Light lubrication with oil in the ISO VG 15-30 range is of advantage only where special ease of operation is important (for example, measurement slides) along with minimal loads and speeds.

We use special greases for cleanroom and vacuum applications (Klüber).

As regards lubricating intervals for slides, no exact figures can be indicated, as this depends on the particular application. Regular examination of the state of lubrication at the beginning of an operation will enable the relubrication intervals to be determined for the given application.

## Masses

The figures for mass given in the tables are approximate values for slides made from the particular material.

The mass of slides made from special aluminium material is around 40 % lower.

www.lmotion.ru lmotion-mail@ya.ru Тел.: (495)-921-34-60


# Dovetail slides and tables

## General

The dovetail slide and table programme is based on a modular design. The dimensions of the dovetail slides are identical with those of the precision slides.

Information of the detailed design of the slides will be found in the tables entitled “Detailed design” on page 22.

The top and bottom have a square attachment hole pattern with dimensions J x J which should be adequate.

I the number of holes should prove insufficient, please use the extra drilling hole pattern ZB, pages 28-29.

There are threads in the upper part of the standard hole pattern. Please comply with the maximum permissible thread reach $T_1$.

The bottom has recesses conforming to DIN 74 Form K for cylindrical screws to DIN 912.

## Dovetail tables for manual operation (Fig. 19)

For dimensions, see tables on pages 24-26.

This range can be supplied in widths 50 to 300. The upper part in each case is longer than the lower part. The stroke is limited by endplates on both sides.

They have a lead screw with a bronze nut mounted in the lower part of the slide (axial clearance < 0,05 mm).

The screws are mounted in an assembly of preloaded angular-contact ball bearings in the thick front endplate.

Please note that it may be possible to attach a locking device to these slides (see page 27).

Type AR1

This range can be supplied in two different models:

- SSM- with micrometer knurl
- SSK - with crank handle

Fig. 19

SSM slides SSK slides

**SSM- with micrometer knurl**
Vernier ring with spring preloading, easy to turn. One division equals
0,02 mm with B 50, 75, 100
0,01 mm with B 150, 200
0,05 mm with B 300

**SSK- with crank handle**
as SSM, but instead of knurled screw equipped with crank handle.

www.lmotion.ru lmotion-mail@ya.ru Тел.: (495)-921-34-60


# S. - Dovetail table: Detailed design B 50-300

(for product description, see page 21)

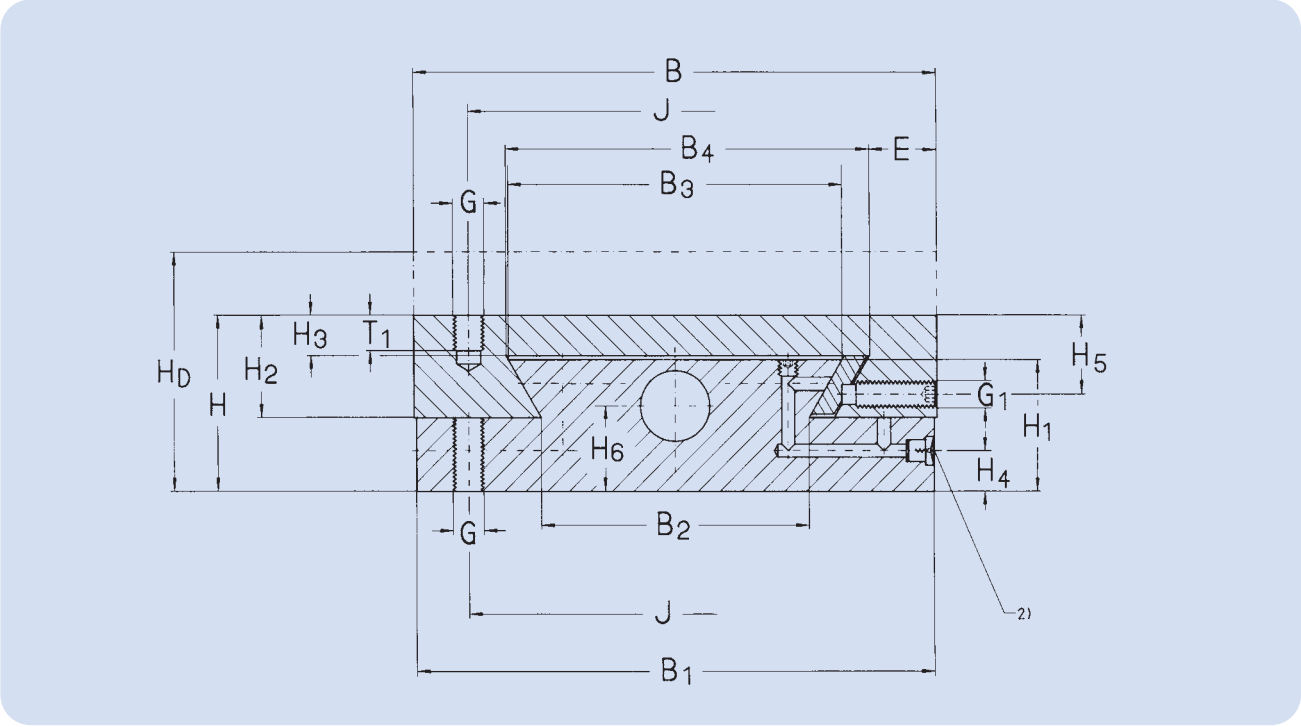


Dimensions

| B | $B_1$ | H | $H_D$ 1) | $B_2$ | $B_3$ | $B_4$ | E | $H_1$ | $H_2$ |
|---|---|---|---|---|---|---|---|---|---|
| mm | | | | | | | | | |
| **50** | 49 | 25 | 35 | 20,8 | 29,4 | 33,8 | 6,2 | 17,5 | 15 |
| **75** | 74 | 32 | 44 | 34,9 | 46,4 | 51,9 | 9,1 | 22,5 | 19,5 |
| **100** | 99 | 40 | 50 | 50,1 | 63,4 | 70,1 | 11,9 | 27,5 | 24 |
| **150** | 149 | 50 | 66 | 78,1 | 97,7 | 104,5 | 19,7 | 38 | 29 |
| **200** | 199 | 60 | 75 | 108 | 129,4 | 139,6 | 25,4 | 41,5 | 37 |
| **300** | 299 | 75 | 95 | 171,1 | 198,9 | 212,1 | 37,9 | 49 | 50 |

1) Only for "thick" top with DT T-slot: please see order codes
2) Tr-lubricating nipple conforming to D6 DIN 4305, on both sides, approximately centrally along length $L_2$

www.lmotion.ru lmotion-mail@ya.ru Тел.: (495)-921-34-60

# S. - Dovetail table with standard drill hole pattern

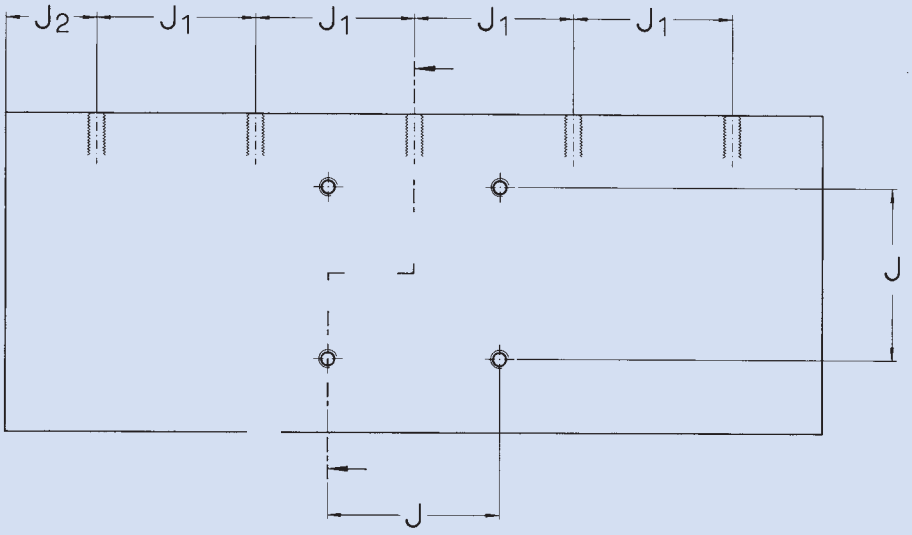


For possible additional drill hole patterns, please see pages 28-29.

| Dimensions | | | | | | | | | | |
|---|---|---|---|---|---|---|---|---|---|---|
| | | | | | | | Recesses and Threads | | | |
| $H_3$ | $H_4$ | $H_5$ | $H_6$ | J | $J_1$ | $J_2$ | G | $G_1$ | $T_1$ | $T_2$ |
| mm | | | | | | | | | | |
| 7 | 5 | 11,5 | 12,3 | 37 | 25 | 15 | M4 | M4 | 5 | 4,6 |
| 9 | 6,3 | 14,5 | 15 | 62 | 25 | 15 | M4 | M5 | 6 | 4,6 |
| 12 | 8 | 18,5 | 15,5 | 74 | 25 | 17,5 | M6 | M6 | 9 | 6,8 |
| 11,5 | 10,5 | 22 | 24 | 116 | 50 | 30 | M8 | M8 | 9 | 9 |
| 18 | 11,5 | 28 | 25 | 154 | 50 | 30 | M8 | M8 | 14 | 9 |
| 25 | 12,5 | 38 | 28 | 245 | 50 | 32,5 | M10 | M8 | 18 | 11 |

www.lmotion.ru lmotion-mail@ya.ru Тел.: (495)-921-34-60

# SS. - Dovetail positioning table for manual operation
## B 50-75 (for product description, see page 21)

Design SSM

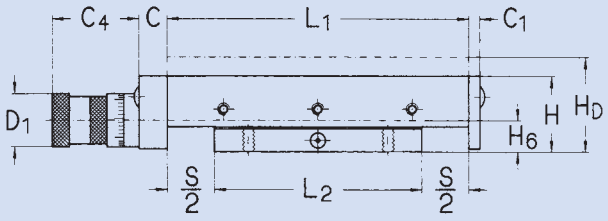


Design SSK

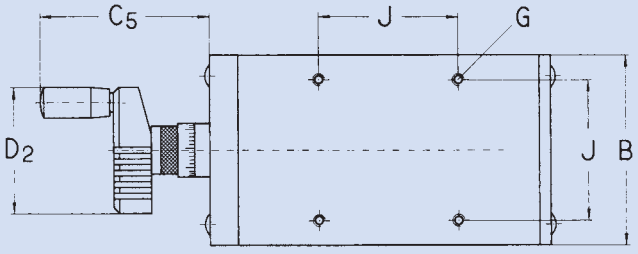


For detailed dimensions, see page 22

| Dimensions | | | | | | | | | | | | | | | | | | |
|---|---|---|---|---|---|---|---|---|---|---|---|---|---|---|---|---|---|---|
| | | | | | Stroke | | | | | Screw | | | | | | Load carrying capacity | | Mass |
| B | H | $H_D$[1]) | $L_1$ | $L_2$ | S | C | $C_1$ | $C_4$ | $C_5$ | Ø | $D_1$ | $D_2$ | G | $H_6$ | J | $C_{eff}$ | $C_o$ | GG |
| mm | | | | | | | | | | | | | | | | N | | kg |
| **50** | 25 | 35 | **80** | 55 | **25** | 14 | 5 | 37,5 | - | M6x1 | 23 | - | M4 | 12,3 | 37 | 131 | 1 310 | 0,7 |
| | | | **130** | 105 | **25** | | | | | | | | | | | 250 | 2 500 | 1,2 |
| | | | **130** | 80 | **50** | | | | | | | | | | | 191 | 1 905 | 1,0 |
| | | | **180** | 130 | **50** | | | | | | | | | | | 310 | 3 100 | 1,5 |
| | | | **130** | 55 | **75** | | | | | | | | | | | 131 | 1 310 | 1,0 |
| | | | **180** | 105 | **75** | | | | | | | | | | | 250 | 2 500 | 1,3 |
| | | | **180** | 80 | **100** | | | | | | | | | | | 191 | 1 905 | 1,3 |
| **75** | 32 | 44 | **130** | 105 | **25** | 15 | 6 | 46 | 88 | M10x1 | 30 | 71 | M4 | 15 | 62 | 353 | 3 530 | 2,4 |
| | | | **180** | 155 | **25** | | | | | | | | | | | 521 | 5 210 | 3,2 |
| | | | **180** | 130 | **50** | | | | | | | | | | | 437 | 4 370 | 3,0 |
| | | | **230** | 180 | **50** | | | | | | | | | | | 605 | 6 050 | 3,3 |
| | | | **180** | 105 | **75** | | | | | | | | | | | 353 | 3 530 | 2,7 |
| | | | **230** | 155 | **75** | | | | | | | | | | | 521 | 5 210 | 3,5 |
| | | | **230** | 130 | **100** | | | | | | | | | | | 437 | 4 370 | 3,3 |
| | | | **280** | 180 | **100** | | | | | | | | | | | 605 | 6 050 | 4,1 |
| | | | **280** | 155 | **125** | | | | | | | | | | | 521 | 5 210 | 3,9 |
| | | | **280** | 130 | **150** | | | | | | | | | | | 437 | 4 370 | 3,7 |

1) Only for slides with "thick" top and DT T-slots: please see order codes
For order designation: please see order codes, page 80. Example of order: SSM 50.180.50

# SS. - Dovetail positioning table for manual operation B 100-150 (for product description, see page 21)

Design SSM

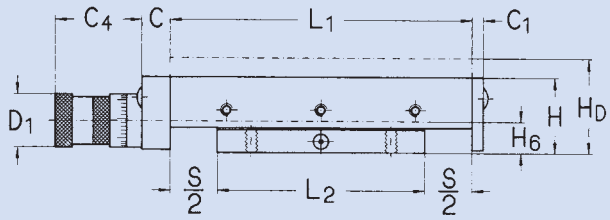


Design SSK

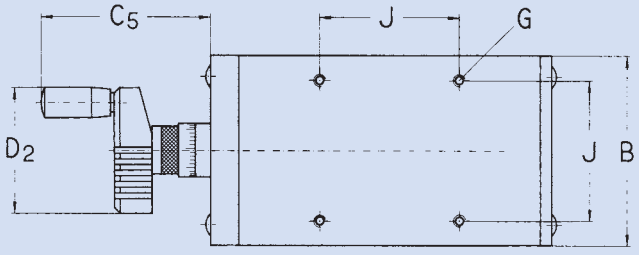


For detailed dimensions, see page 22

| Dimensions | | | | | | | | | | | | | | | | | | |
|---|---|---|---|---|---|---|---|---|---|---|---|---|---|---|---|---|---|---|
| | | | | | Stroke | | | | | Screw | | | | | | Load carrying capacity | | Mass |
| B | H | $H_D$[1]) | $L_1$ | $L_2$ | S | C | $C_1$ | $C_4$ | $C_5$ | Ø | $D_1$ | $D_2$ | G | $H_6$ | J | $C_{eff}$ | $C_o$ | GG |
| mm | | | | | | | | | | | | | | | | N | | kg |
| **100** | 40 | 50 | **210** | 160 | **50** | 15 | 6 | 46 | 88 | M10x1 | 30 | 71 | M6 | 15.5 | 74 | 675 | 6 750 | 5,7 |
| | | | **310** | 260 | **50** | | | | | | | | | | | 1 100 | 10 970 | 8,6 |
| | | | **310** | 210 | **100** | | | | | | | | | | | 886 | 8 860 | 7,9 |
| | | | **410** | 310 | **100** | | | | | | | | | | | 1 310 | 13 080 | 10,6 |
| | | | **310** | 160 | **150** | | | | | | | | | | | 675 | 6 750 | 7,1 |
| | | | **410** | 260 | **150** | | | | | | | | | | | 1 100 | 10 970 | 9,9 |
| | | | **410** | 210 | **200** | | | | | | | | | | | 886 | 8 860 | 9,1 |
| **150** | 50 | 66 | **310** | 210 | **100** | 20 | 8 | 63 | 122 | TR16x2 | 47 | 102 | M8 | 24 | 116 | 1 345 | 13 460 | 15 |
| | | | **510** | 410 | **100** | | | | | | | | | | | 2 630 | 26 280 | 25 |
| | | | **510** | 310 | **200** | | | | | | | | | | | 1 985 | 19 870 | 27 |
| | | | **610** | 410 | **200** | | | | | | | | | | | 2 630 | 26 280 | 27 |
| | | | **610** | 310 | **300** | | | | | | | | | | | 1 985 | 19 870 | 24 |
| | | | **810** | 510 | **300** | | | | | | | | | | | 3 270 | 32 690 | 34 |
| | | | **810** | 410 | **400** | | | | | | | | | | | 2 630 | 26 280 | 30 |

1) Only for slides with "thick" top and DT T-slots: please see order codes
For order designation: please see order codes, page 80. Example of order: SSM 50.180.50

# SS. - Dovetail positioning table for manual operation B 200-300 (for product description, see page 21)

Design SSM

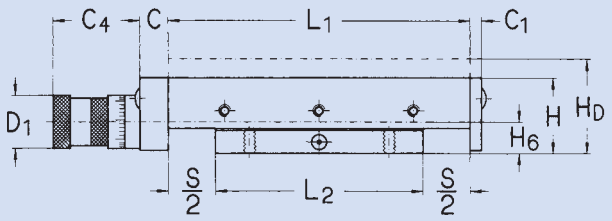


Design SSK

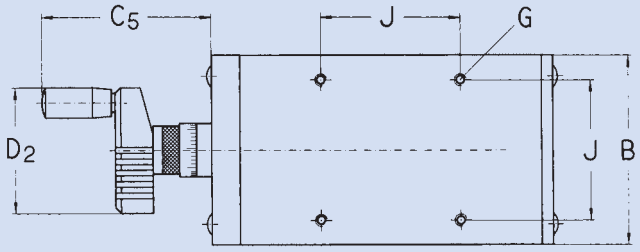


For detailed dimensions, see page 22

| Dimensions | | | | | | | | | | | | | | | | Load carrying capacity | | Mass |
|---|---|---|---|---|---|---|---|---|---|---|---|---|---|---|---|---|---|---|
| B | H | $H_D$[1]) | $L_1$ | $L_2$ | Stroke S | C | $C_1$ | $C_4$ | $C_5$ | Screw Ø | $D_1$ | $D_2$ | G | $H_6$ | J | $C_{eff}$ | $C_o$ | GG |
| mm | | | | | | | | | | | | | | | | N | | kg |
| **200** | 60 | 75 | **310** | 210 | **100** | 20 | 8 | 63 | 122 | TR16x2 | 47 | 102 | M8 | 25 | 154 | 1 695 | 16 970 | 24 |
| | | | **510** | 410 | **100** | | | | | | | | | | | 3 315 | 33 130 | 41 |
| | | | **510** | 310 | **200** | | | | | | | | | | | 2 505 | 25 050 | 36 |
| | | | **610** | 410 | **200** | | | | | | | | | | | 3 315 | 33 130 | 45 |
| | | | **610** | 310 | **300** | | | | | | | | | | | 2 505 | 25 050 | 40 |
| | | | **810** | 510 | **300** | | | | | | | | | | | 4 120 | 41 210 | 56 |
| | | | **810** | 410 | **400** | | | | | | | | | | | 3 315 | 33 130 | 51 |
| **300** | 75 | 95 | **415** | 315 | **100** | 22 | 10 | 63 | 122 | TR20x4 | 47 | 102 | M10 | 28 | 245 | 3 615 | 36 130 | 64 |
| | | | **615** | 515 | **100** | | | | | | | | | | | 5 910 | 59 070 | 96 |
| | | | **615** | 415 | **200** | | | | | | | | | | | 4 760 | 47 600 | 87 |
| | | | **715** | 515 | **200** | | | | | | | | | | | 5 910 | 59 070 | 105 |
| | | | **715** | 415 | **300** | | | | | | | | | | | 4 760 | 47 600 | 95 |
| | | | **915** | 515 | **400** | | | | | | | | | | | 5 910 | 59 070 | 120 |
| | | | **915** | 415 | **500** | | | | | | | | | | | 4 760 | 47 600 | 112 |

1) Only for slides with "thick" top and DT T-slots: please see order codes, pages 80
For order designation: please see order codes, page 80. Example of order: SSK 200.810.300.DT

www.lmotion.ru lmotion-mail@ya.ru Тел.: (495)-921-34-60



**AR1 locking device for dovetail slides**

The AR 1 locking device is a friction device which is fitted to the adjustment side of a slide assembly. Increased clamping is applied to the set rail by means of the clamping lever with a screw. This produces friction resistance.

The position of the clamping lever is set exworks so that the slide can be mounted on a base extending sideways without impairment of its clamping and unlocking operations.

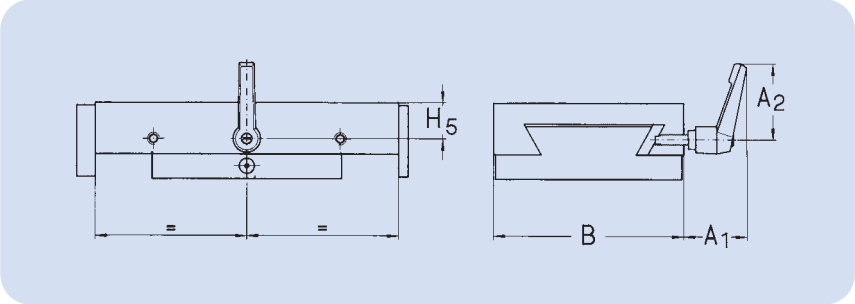


Dimensions

| B | $A_1$ | $A_2$ | $H_5$ |
|---|---|---|---|
| mm | | | |
| 50 | 32 | 42 | 11,5 |
| 75 | 32 | 42 | 14,5 |
| 100 | 32 | 42 | 18,5 |
| 150 | 43 | 63 | 22 |
| 200 | 43 | 63 | 28 |
| 300 | 43 | 63 | 38 |

**WG-WA mounting brackets**

Designs:

WG made from GG25 or blackned steel according to dimensions

WA made from light metal alloy, surface protection on request at an extra charge.

For a precise definition of assembly of angle brackets for two or more axes, a drawing should enclosed with the order.

Separate angle pieces do not have attachment holes provided.

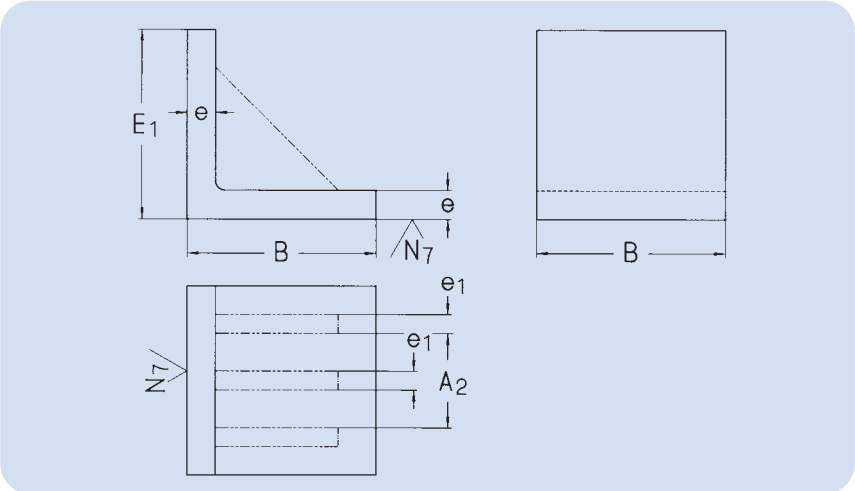


| Type | Dimensions | | | | |
|---|---|---|---|---|---|
| WG/WA | $A_2$ | B | $E_1$ | e | $e_1$ |
| mm | | | | | |
| 50 | - | 50 | 50 | 10 | 10 |
| 75 | - | 75 | 75 | 12 | 10 |
| 100 | - | 100 | 100 | 15 | 10 |
| 150 | 50 | 150 | 150 | 18 | 12 |
| 150 H | 50 | 150 | 250 | 18 | 12 |
| 200 | 90 | 200 | 200 | 20 | 12 |
| 200 H | 90 | 200 | 330 | 20 | 12 |
| 300 | 175 | 300 | 300 | 25 | 15 |
| 300 H | 175 | 300 | 520 | 25 | 15 |

For order designation: please see order codes, pages 80 and 81.

www.lmotion.ru lmotion-mail@ya.ru Тел.: (495)-921-34-60

# Additional drill hole pattern for dovetail slides and tables: top and bottom B 50-150 (for product description, see page 21)

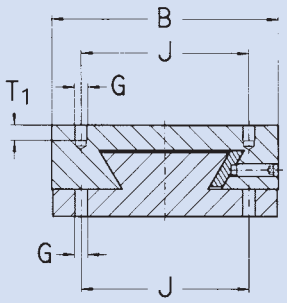


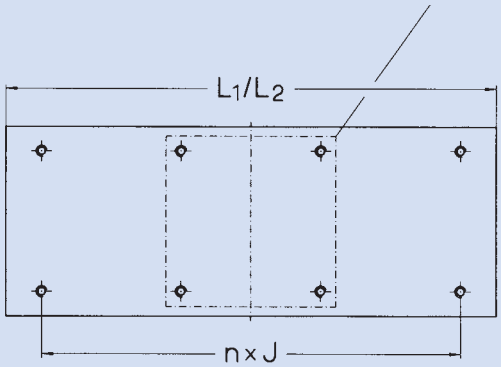


drawn: ZW03

| Dimensions | | | | | | | | | Number |
|---|---|---|---|---|---|---|---|---|---|
| B | Top length $L_1$ 1) | Bottom length $L_2$ 1) | G | J | N | $N_1$ | $T_1$ | $T_2$ | n 2) |
| mm | | | | | | | | | - |
| **50** | 130 | 130 | M4 | 37 | 4,5 | 8 | 6 | 4,6 | 3 |
| **50** | 180 | - | M4 | 37 | 4,5 | 8 | 6 | 4,6 | 3 |
| **75** | 230 | - | M4 | 62 | 4,5 | 8 | 6 | 4,6 | 3 |
| **75** | 280 | - | M4 | 62 | 4,5 | 8 | 6 | 4,6 | 3 |
| **100** | 310 | 260 | M6 | 74 | 6,6 | 11 | 9 | 6,8 | 3 |
| **100** | 310 | 310 | M6 | 74 | 6,6 | 11 | 9 | 6,8 | 3 |
| **100** | 410 | - | M6 | 74 | 6,6 | 11 | 9 | 6,8 | 5 |
| **150** | 510 | 410 | M8 | 116 | 9 | 15 | 13 | 9 | 3 |
| **150** | 510 | 510 | M8 | 116 | 9 | 15 | 13 | 9 | 3 |
| **150** | 610 | - | M8 | 116 | 9 | 15 | 13 | 9 | 5 |
| **150** | 810 | - | M8 | 116 | 9 | 15 | 13 | 9 | 5 |

1) Additional drill hole pattern not available for the shorter lengths not shown here.
For order designation: please see order codes, page 81.

2) "n" denotes max. poss. number of pitches J in a particular top or bottom length. Four holes are standard in each top and bottom (1xJ). 3xJ accordingly denotes 8 holes.
Example of order: ZBU5

www.lmotion.ru lmotion-mail@ya.ru Тел.: (495)-921-34-60

# Additional drill hole pattern for dovetail slides and tables: top and bottom B 200-300 (for product description, see page 21)

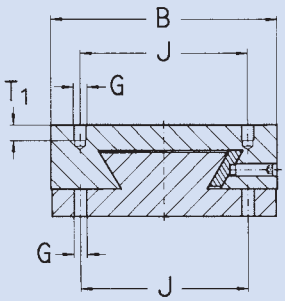


Standard drill hole pattern available

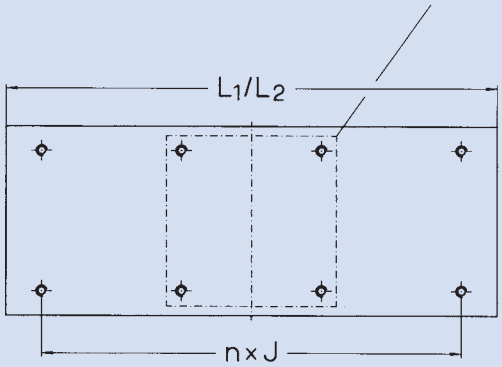


drawn: ZW03

| Dimensions | | | | | | | Number |
|---|---|---|---|---|---|---|---|
| B | Top length $L_1$ 1) | Bottom length $L_2$ 1) | G | J | $T_1$ | $T_2$ | n 2) |
| mm | | | | | | | - |
| 200 | 510 | 510 | M8 | 154 | 16 | 9 | 3 |
| 200 | 610 | - | M8 | 154 | 16 | 9 | 3 |
| 200 | 810 | - | M8 | 154 | 16 | 9 | 5 |
| 300 | - | 515 | M10 | 245 | 18 | 11 | 1/2J + 1J + 1/2J |
| 300 | 615 | - | M10 | 245 | 18 | 11 | 1/2J + 1J + 1/2J |
| 300 | 715 | - | M10 | 245 | 18 | 11 | 1/2J + 1J + 1/2J |
| 300 | 915 | - | M10 | 245 | 18 | 11 | 3 |

1) Additional drill hole pattern not available for the shorter lengths not shown here.
For order designation: please see order codes, page 81.

2) "n" denotes max. poss. number of pitches J in a particular top or bottom length. Four holes are standard in each top and bottom (1xJ). 3xJ accordingly denotes 8 holes.
Example of order: ZBU5

www.lmotion.ru. lmotion-mail@ya.ru Тел.: (495)-921-34-60


# Precision slides and positioning tables

General
All precision slides and tables are available as standard with three different types of rail guide:

- R-rail guides
  Slides of dimensions B 50-200:
  with rails from the SKF modular product range, crossed roller assemblies of series LWRE, and cage type LWAKE. This series, which has the same external dimensions as rail type LWR, is distinguished by:
  – greater stiffness because of a greater roller diameter
  – greater load-carrying capacity
  – improved rolling behaviour
  Slides of dimension B 300:
  with crossed roller assemblies of standard series LWR and cage type LWAL

- N-rail guides
  Available for slides of dimension B 100-400:
  with rails from the SKF modular product range, needle roller assemblies of series LWRM/LWRV, and cage type LWHV or LWHW. This series, which has the same external dimensions, is distinguished by:
  – enhanced stiffness
  – enhanced load-carrying capacity.

- P-rail guides
  Available for slides of dimension B 50-300:
  with rails from the SKF modular product range and dry sliding liner assemblies of the series LWRPM/LWRPV. This series, which has the same external dimensions, is distinguished by:
  – resistance to shock
  – suitability for short or high-frequency strokes

For information on additional characteristic features and selection criteria, please refer to the chapter "Selection of a suitable slide system", page 7.

The precision slide and table programme is designed as a modular system. This means that the individual parts of the various series constantly recur. Thus the top of a "precision slide with endplates" of dimension RE 100.260.50 is identical with both the top of a "precision table for manual operation" of dimension RSM 100.260.50, and with the top of a "precision table for motor drive" of dimension RSS 100.260.50.

The same applies to the other slide components such as the base, endplates, screws etc. Hence it is possible to make up on request other combinations of tops and bottoms other than those shown in the Tables.

The internal and external dimensions of the tops and bottoms used are therefore the same throughout all ranges, independently of the guidance system used. The external dimensions of the RS series are even identical with the dovetail slides of series SS (see pages 24-26).

Width B and length $L_1$ are therefore used as basic common characteristic values throughout the catalogue.

For information on all these identical and constantly recurring dimensions and the detailed design of the slides, please refer to the tables entitled "Detailed design", pages 34-39.

All tops and bottoms have as standard a square drill hole pattern of dimensions J x J. If the number of holes should prove insufficient, please use the additional drill hole pattern ZB on pages 66-67.

The standard drill hole pattern has threaded holes in the top. Please note the maximum permissible thread depth $T_1$.
The bottom has recesses conforming to DIN 74 Form K for cylindrical screws to DIN 912.

An attachment drill hole pattern can be provided to your specifications at an extra charge. However please make sure that the drill hole pattern which you want does not conflict either with the standard drill hole pattern or with the rail attachment holes.

www.lmotion.ru lmotion-mail@ya.ru Тел.: (495)-921-34-60

**Precision slides** (Fig. 20)
**with endplates RE - NE - PE**
For dimensions, please see Tables on pages 40-43.
This range is available in the following designs and widths:

- RE (crossed roller guides ) with widths B 50 to 300
- NE (needle roller guides ) with widths B 100 to 300
- PE (dry sliding liner guides) with widths B 50 to 300.

The slide top is longer than the base. The stroke is limited by endplates on both sides. The slides are equipped with overrunning cages.

The front endplate C is thicker than the rear endplate $C_1$. This permits the retrofitting of cylinders, micrometers, probes and any other kind of drives.

Fig. 20

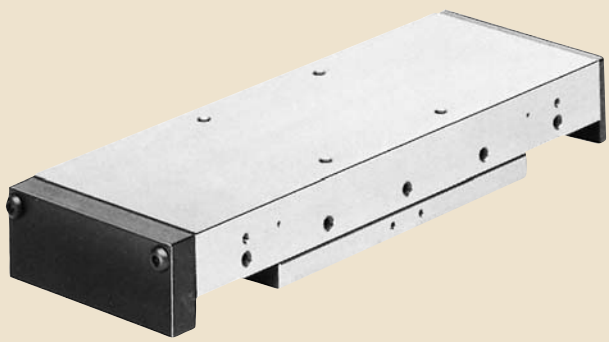

RE slide

**Precision tables** (Fig. 21)
**for manual operation RS - NS - PS**
For dimensions, please see Tables on pages 44-51.

The design of this range is the same as that of the RE - NE - PE slides. However they have, in addition, a lead screw with bronze nut. It is mounted on the slide base (axial play < 0,05 mm).

The screw is supported by a set of preloaded angular contact ball bearings in the front, thick endplate.
This range is available in the following designs and widths:

- RS (crossed roller guides) with widths B 50 to 300
- NS (needle roller guides) with widths B 100 to 300
- PS (dry sliding liner guides) with widths B 50 to 300

and also in two variants:

Fig. 21

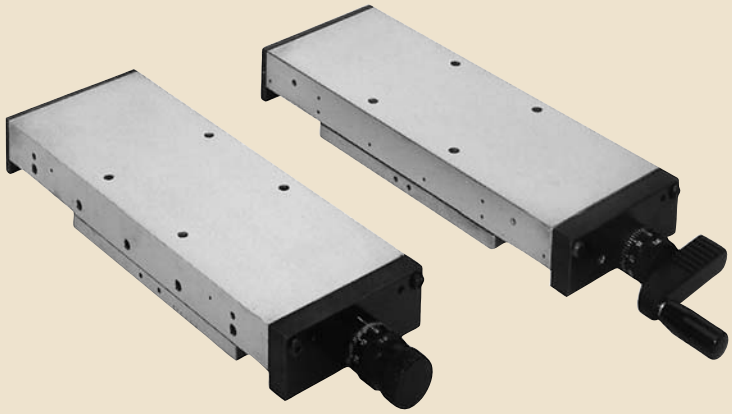

RSM slide RSK slide

**RSM - NSM - PSM - slides with micrometer knurl**
Vernier ring with spring preloading, easy to turn. A division corresponds to 0,01 mm (or 0,02 mm for B 50).

**RSK - NSK - PSK - slides with hand crank**
Similar to RSM - NSM - PSM.
but instead of knurled screw a hand crank. Please note that it is possible to attach a locking device to these slides (see page 68, Type AR2).

www.lmotion.ru lmotion-mail@ya.ru Тел.: (495)-921-34-60

Fig. 22

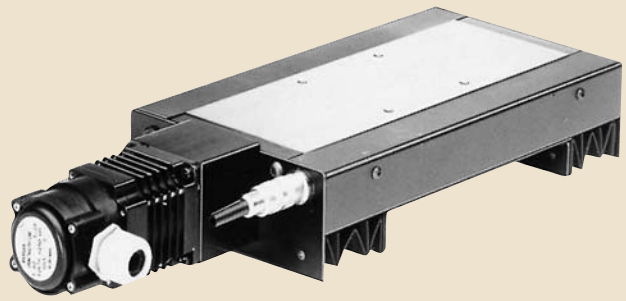

RSS slide

## Precision tables for motor drive RSS - NSS - PSS (Fig. 22)

For dimensions, please see tables on pages 52-59.
This range is available in the following designs and widths:

- RSS (crossed roller guides) with width B 50 to 300
- NSS (needle roller guides ) with width B 100 to 400
- PSS (dry sliding liner guides) with width B 100 to 300.

The slide top is longer than the base. The stroke is limited by endplates on both sides. It should be noted that the nominal stroke "S" given in the tables is the maximum effective stroke between the endplates (buffers).

To avoid damage to the screw, this nominal stroke must not be fully used in operation the motor. The effective stroke, for example, between the limit switches must be selected by taking 5-20 mm less, depending on speed.

The slides are equipped with preloaded planetary roller screws which can be selected with various pitches (please see tables on pages 64-65). Drive screws are supported at the motor end by preloaded angular contact bearings in the table endplate.

These tables are provided with PUR polyester bellows as standard. As these bellows extend beyond the attachment surface of the bottom, a base plate GP can also be fitted. It can serve as:

- **Base plate** for standard assembly (slide bottom underneath)
- **Table plate** for overhead mounting (top above)
- **Intermediate plate** for cross table assembly with toothed belt plate drive

For the dimensions of this GP base plate, please see table on page 74.

The bellows are overlapped on both sides by two cover sheets in the slide top. Limit and reference switches can be fitted under the right-hand side cover (see "Accessories" on page 69).

These slides can be equipped with standard motor flanges including torsion-proof couplings (see "Accessories" on pages 76 and 78)

If space restrictions require it, the standard motors can also be attached on the left or right side using a toothed belt drive (see "Accessories" on pages 77 and 79).

Attachment of a direct linear measurement system is also possible (see "Accessories" on page 74).

The individual slides can also be assembled in various ways as cross tables or multiaxis units (see in the section on "Accessories", "Cross table assembly" on pages 70-71 and "WG - WW mounting bracket" on page 68).

www.lmotion.ru lmotion-mail@ya.ru Тел.: (495)-921-34-60

**Precision tables for motor drive, sealed**
**RSAS - NSAS - PSAS** (Fig. 23)

For dimensions, see tables on pages 60-63.
This range is available in widths 100 to 300. The design of the tables is basically similar to that of the RSS-NSS-PSS slides. However, for better protection of screws and guides, wipers are fitted instead of bellows. These wipers seal the slide against a wiper plate mounted underneath. The wipers are also provided on one side of the wiper plate with an M-5 threaded connection for the injection of clean and dry air (max. 0,1 bar). The slides are 100 % dustproof.

These slide types are equipped as standard with a toothed belt drive which permits the mounting of a raised motor at the side.

Limit and reference switches can be fitted under the right-hand side cover plat (see under "Accessories", page 69).

Attachment of a direct linear measurement system under the left-hand side cover plate is also possible (see "Accessories", page 74).

Fig. 23

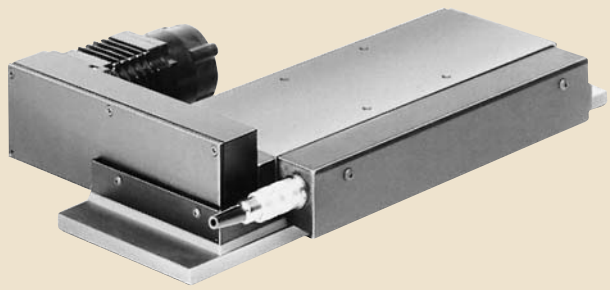

RSAS slide

Fig. 24

**Standard motors**
The standard motor flanges and toothed belt drives (pages 76-79) are matched to the standard motors used by us in various designs and dimensions.

The fitting of other motors by the customer is also possible. For this we need the exact motor dimensions in order to be able to make a special motor flange.

For all standard motors we can also deliver, on request, the following which are matched to the motors:

- power units for stepping motors
- four-quadrant control including transformer for DC motors
- servo module for AC motors for use either as European card format or 19" rack.
  Please ask for our separate documentation.

**Control units** (Fig. 24)

We can also deliver with the complete slide units, and on request, freely programmable CNC control units for one or several axes, depending on the application, for use as:

- linear path control
- continuous path control with circular interpolation

Please ask for our separate documentation.

www.lmotion.ru lmotion-mail@ya.ru Тел.: (495)-921-34-60


# R - N - P Precision slides: Detailed design B 50-100

(for product description page, see page 30)

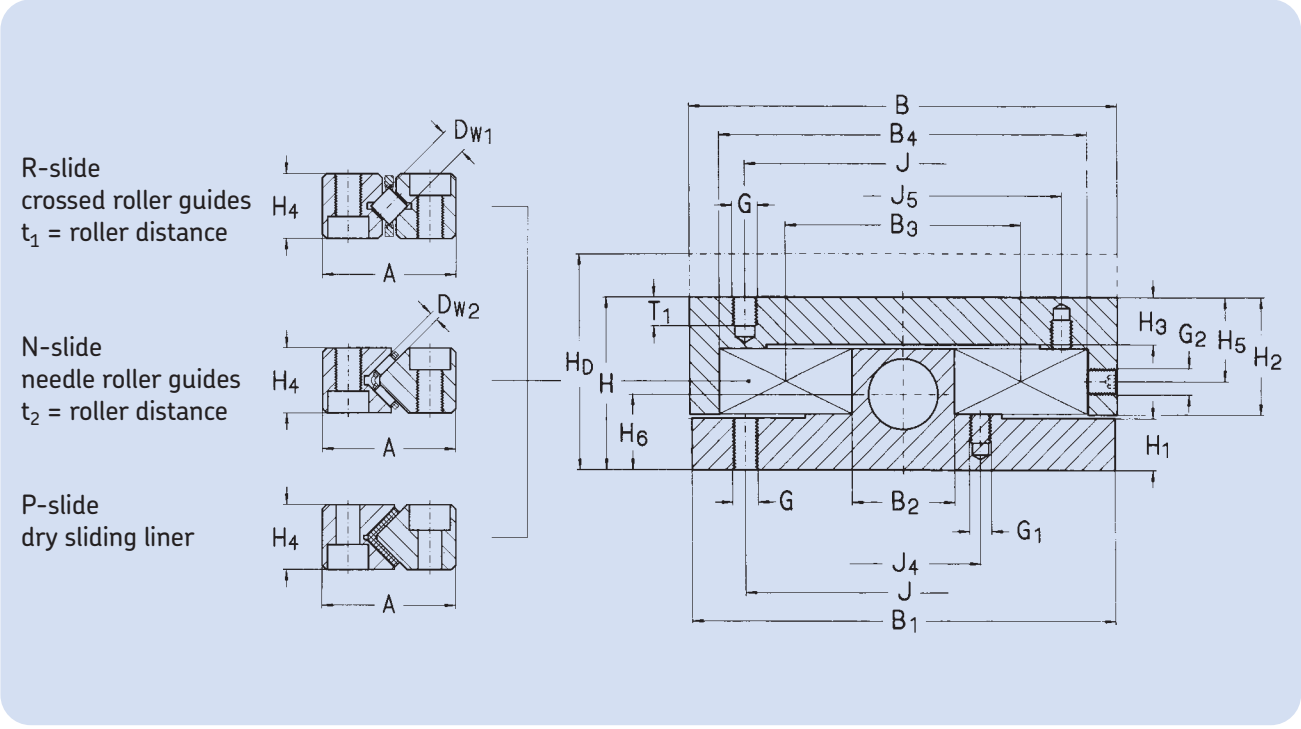


Dimensions

| B | $B_1$ | $D_{w1/t1}$ | $D_{w2/t2}$ | H | $H_D$ [1] | A | $B_2$ | $B_3$ | $B_4$ | $H_1$ | $H_2$ | $H_3$ | $H_4$ | $H_5$ | $H_6$ |
|---|---|---|---|---|---|---|---|---|---|---|---|---|---|---|---|
| mm | | | | | | | | | | | | | | | |
| **50** | 49 | 4/6,25 | - | 25 | 35 | 18 | 8,5 | 26,5 | 44,5 | 7,5 | 17 | 7 | 8 | 11,5 | 12,3 |
| **75** | 74 | 4/6,25 | - | 32 | 44 | 18 | 23 | 41 | 59 | 10,5 | 21 | 8,5 | 8 | 13 | 15 |
| **100** | 99 | 8/11 | 2/3,75 | 40 | 50 | 31 | 24 | 55 | 86 | 12 | 27,5 | 11 | 15 | 19,5 | 15,5 |

1) Only for "thick" D top

www.lmotion.ru lmotion-mail@ya.ru Тел.: (495)-921-34-60

# R - N - P Precision slides with standard drill hole pattern and rail attachment holes

Base

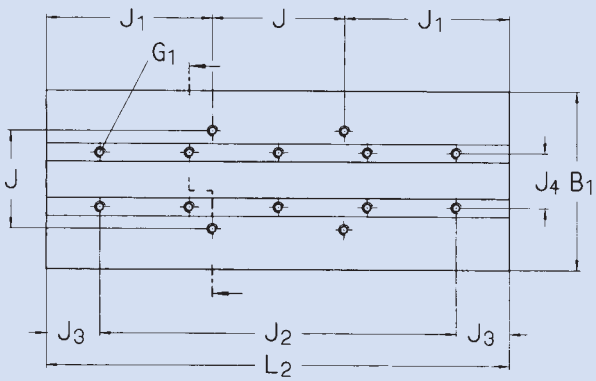


Top

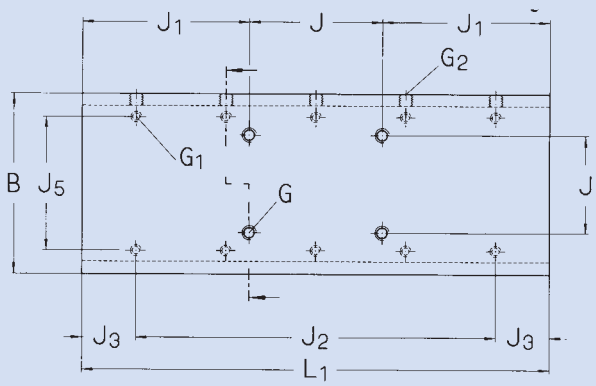


For possible additional drill hole patterns, see pages 66-67

Dimensions

| | | Holes in base and top | | | | | | Recesses and threads | | | | |
|---|---|---|---|---|---|---|---|---|---|---|---|---|
| $L_1$ | $L_2$ | J | $J_1$ | $J_2$ | $J_3$ | $J_4$ | $J_5$ | G | $G_1$ | $G_2$ | $T_1$ | $T_2$ |
| mm | | | | | | | | | | | | |
| - | 55 | 37 | 9 | 1x25 | 15 | 15,5 | 37,5 | M4 | M3 | M3 | 6 | 4,6 |
| 80 | 80 | | 21,5 | 2x25 | | | | | | | | |
| - | 105 | | 34 | 3x25 | | | | | | | | |
| 130 | - | | 46,5 | 4x25 | | | | | | | | |
| 180 | - | | 71,5 | 6x25 | | | | | | | | |
| - | 105 | 62 | 21,5 | 3x25 | 15 | 30 | 52 | M4 | M3 | M3 | 6 | 4,6 |
| 130 | 130 | | 34 | 4x25 | | | | | | | | |
| - | 155 | | 46,5 | 5x25 | | | | | | | | |
| 180 | - | | 59 | 6x25 | | | | | | | | |
| 230 | - | | 84 | 8x25 | | | | | | | | |
| - | 210 | 74 | 68 | 3x50 | 30 | 36 | 74 | M6 | M5 | M6 | 9 | 6,8 |
| 260 | 260 | | 93 | 4x50 | | | | | | | | |
| 310 | 310 | | 118 | 5x50 | | | | | | | | |
| 360 | - | | 143 | 6x50 | | | | | | | | |
| 410 | - | | 168 | 7x50 | | | | | | | | |
| 460 | - | | 193 | 8x50 | | | | | | | | |

www.lmotion.ru lmotion-mail@ya.ru Тел.: (495)-921-34-60

# R - N - P Precision slides: detailed design B 150-200

(for product description page, see page 30)

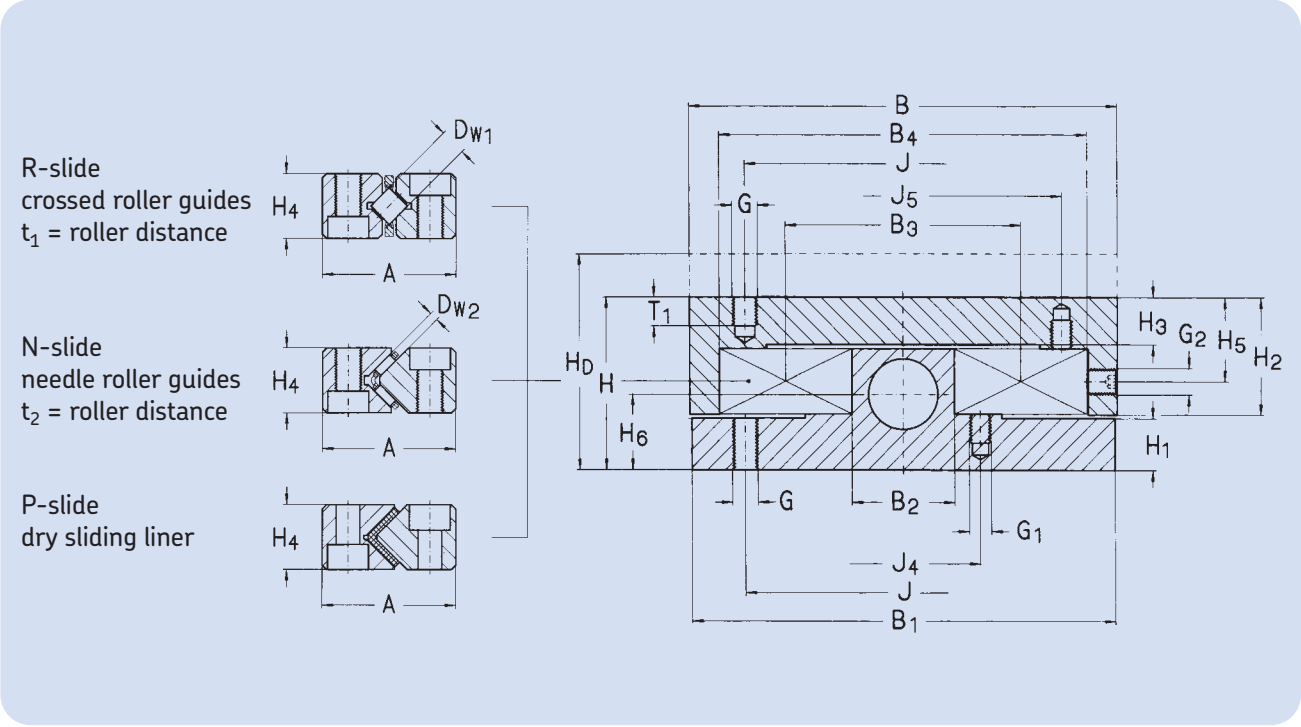


Dimensions

| B | $B_1$ | $D_{w1/t1}$ | $D_{w2/t2}$ | H | $H_D$ [1] | A | $B_2$ | $B_3$ | $B_4$ | $H_1$ | $H_2$ | $H_3$ | $H_4$ | $H_5$ | $H_6$ |
|---|---|---|---|---|---|---|---|---|---|---|---|---|---|---|---|
| mm | | | | | | | | | | | | | | | |
| **150** | 149 | 12/16 | 2/4,5 | 50 | 66 | 44 | 38 | 82 | 126 | 14 | 35,5 | 13 | 22 | 24,5 | 24 |
| **200** | 199 | 12/16 | 2/4,5 | 60 | 75 | 44 | 80 | 124 | 168 | 19,5 | 40 | 17 | 22 | 29 | 25 |

1) Only for "thick" D top

www.lmotion.ru lmotion-mail@ya.ru Тел.: (495)-921-34-60

# R - N - P Precision slides with standard drill hole pattern and rail attachment holes

Base

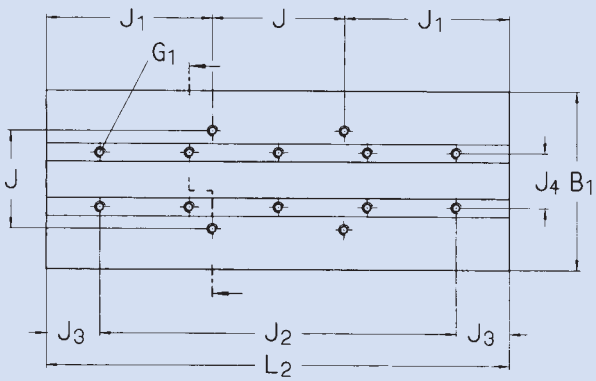


Top

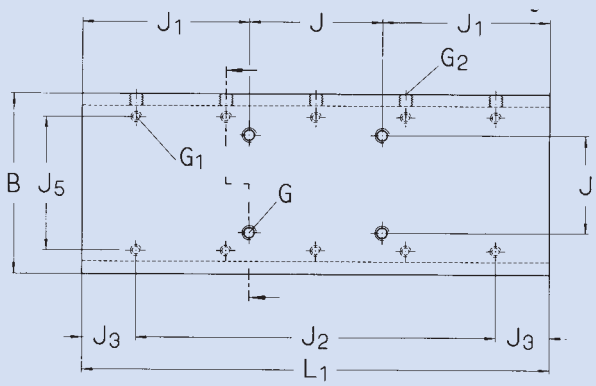


For possible additional drill hole patterns, see pages 66-67

Dimensions

| | | Holes in base and top | | | | | | Recesses and threads | | | | |
|---|---|---|---|---|---|---|---|---|---|---|---|---|
| $L_1$ | $L_2$ | J | $J_1$ | $J_2$ | $J_3$ | $J_4$ | $J_5$ | G | $G_1$ | $G_2$ | $T_1$ | $T_2$ |
| mm | | | | | | | | | | | | |
| - | 310 | 116 | 97 | 2x100 | 55 | 56 | 108 | M8 | M6 | M8 | 13 | 9 |
| 410 | 410 | | 147 | 3x100 | | | | | | | | |
| 510 | 510 | | 197 | 4x100 | | | | | | | | |
| 610 | - | | 247 | 5x100 | | | | | | | | |
| 710 | - | | 297 | 6x100 | | | | | | | | |
| 810 | - | | 347 | 7x100 | | | | | | | | |
| - | 310 | 154 | 78 | 2x100 | 55 | 98 | 150 | M8 | M6 | M8 | 16 | 9 |
| 410 | 410 | | 128 | 3x100 | | | | | | | | |
| 510 | 510 | | 178 | 4x100 | | | | | | | | |
| 610 | - | | 228 | 5x100 | | | | | | | | |
| 710 | - | | 278 | 6x100 | | | | | | | | |
| 810 | - | | 328 | 7x100 | | | | | | | | |
| 910 | - | | 378 | 8x100 | | | | | | | | |

www.lmotion.ru lmotion-mail@ya.ru Тел.: (495)-921-34-60

# R - N - P Precision slides: Detailed design B 300 - 400

(for product description page, see page 30)

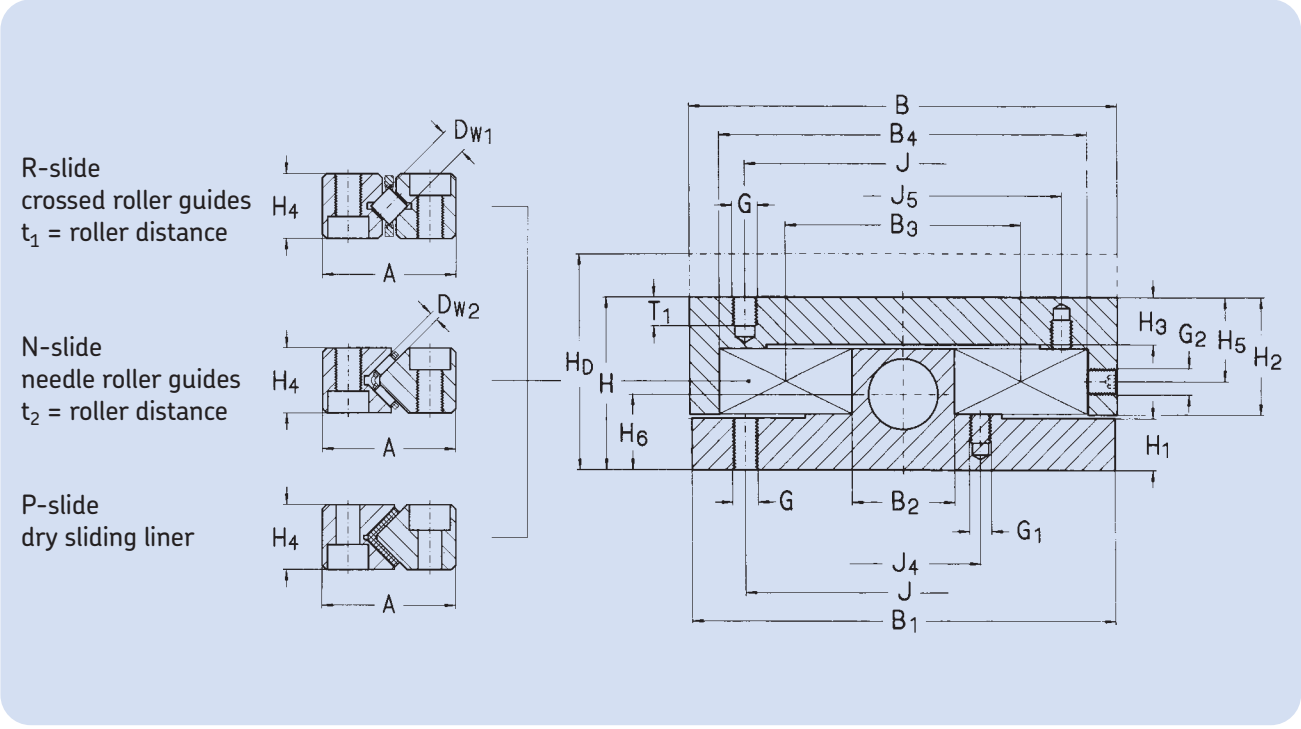


Dimensions

| B | $B_1$ | $D_{w1/t1}$ | $D_{w2/t2}$ | H | $H_D$ [1] | A | $B_2$ | $B_3$ | $B_4$ | $H_1$ | $H_2$ | $H_3$ | $H_4$ | $H_5$ | $H_6$ |
|---|---|---|---|---|---|---|---|---|---|---|---|---|---|---|---|
| mm | | | | | | | | | | | | | | | |
| **300** | 299 | 12/18 | 2,5/5,5 | 75 | 95 | 58 | 140 | 198 | 256 | 20 | 54,5 | 25 | 28 | 40 | 28 |
| **400** | 399 | - | 3/6 | 100 | 125 | 71 | 198 | 269 | 340 | 30 | 69 | 32 | 36 | 51 | 38 |

1) Only for "thick" D top

www.lmotion.ru lmotion-mail@ya.ru Тел.: (495)-921-34-60

# R - N - P Precision slides with standard drill hole pattern and rail attachment holes

Base

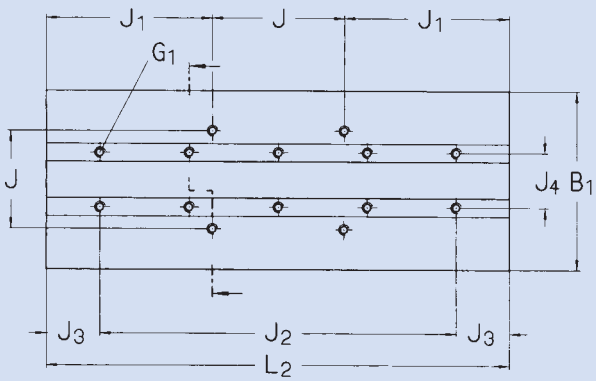


Top

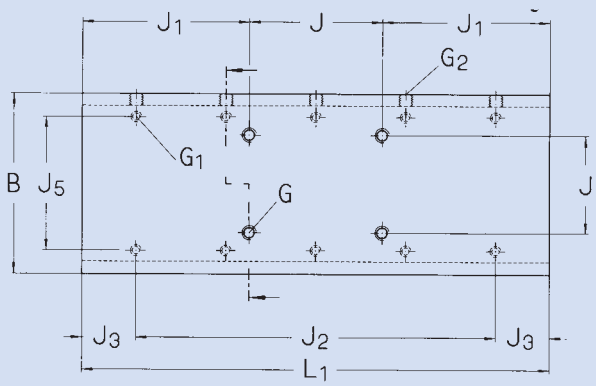


For possible additional drill hole patterns, see pages 66-67

Dimensions

| | | Holes in base and top | | | | | | Recesses and threads | | | | |
|---|---|---|---|---|---|---|---|---|---|---|---|---|
| $L_1$ | $L_2$ | J | $J_1$ | $J_2$ | $J_3$ | $J_4$ | $J_5$ | G | $G_1$ | $G_2$ | $T_1$ | $T_2$ |
| mm | | | | | | | | | | | | |
| - | 315 | 245 | 35 | 2x100 | 57,5 | 164 | 232 | M10 | M 8 | M10 | 18 | 11 |
| - | 415 | | 85 | 3x100 | | | | | | | | |
| 515 | 515 | | 135 | 4x100 | | | | | | | | |
| 615 | - | | 185 | 5x100 | | | | | | | | |
| 715 | - | | 235 | 6x100 | | | | | | | | |
| 815 | - | | 285 | 7x100 | | | | | | | | |
| 915 | - | | 335 | 8x100 | | | | | | | | |
| - | 515 | 340 | 87,5 | 4x100 | 57,5 | 26 | 312 | M12 | M10 | M12 | 24 | 13 |
| 615 | 615 | | 137,5 | 5x100 | | | | | | | | |
| 815 | - | | 237,5 | 7x100 | | | | | | | | |
| 1 015 | - | | 337,5 | 9x100 | | | | | | | | |

www.lmotion.ru lmotion-mail@ya.ru Тел.: (495)-921-34-60

# RE - NE - PE Precision slides with endplates B 50 - 75

(for product description, see page 31)

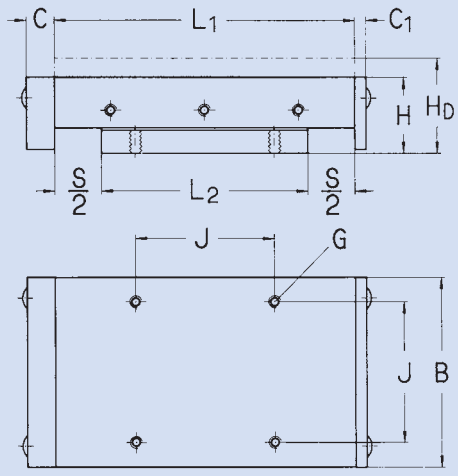


For detailed design, see pages 34-35

| Dimensions | | | | | | | | | | Load-carrying capacity | | | | | | | | Mass |
|---|---|---|---|---|---|---|---|---|---|---|---|---|---|---|---|---|---|---|
| | | | | | Stroke | | | | | RE | | | NE | | | PE | | |
| B | H | $H_D$ [1] | $L_1$ | $L_2$ | S | C | $C_1$ | G | J | $C_{eff}$ | $C_o$ | Z [2] | $C_{eff}$ | $C_o$ | Z [2] | $C_{eff}$ | $C_o$ | GG |
| mm | | | | | | | | | | kN | | - | kN | | - | kN | | kg |
| **50** | 25 | 35 | **80** | 55 | **25** | 14 | 5 | M4 | 37 | 6,2 | 1,7 | 8 | - | - | - | 0,1 | 0,95 | 0,6 |
| | | | **130** | 105 | **25** | | | | | 10,5 | 3,3 | 16 | | | | 0,2 | 1,9 | 1 |
| | | | **130** | 80 | **50** | | | | | 8,4 | 2,5 | 12 | | | | 0,15 | 1,4 | 0,9 |
| | | | **130** | 55 | **75** | | | | | 6,2 | 1,7 | 8 | | | | 0,1 | 0,95 | 0,8 |
| | | | **180** | 105 | **75** | | | | | 10,5 | 3,3 | 16 | | | | 0,2 | 1,9 | 1,2 |
| | | | **180** | 80 | **100** | | | | | 8,4 | 2,5 | 12 | | | | 0,15 | 1,4 | 1,1 |
| **75** | 32 | 44 | **130** | 105 | **25** | 15 | 6 | M4 | 62 | 10,5 | 3,4 | 16 | - | - | - | 0,2 | 1,9 | 2,1 |
| | | | **180** | 155 | **25** | | | | | 14,5 | 5,1 | 24 | | | | 0,3 | 2,9 | 2,9 |
| | | | **180** | 130 | **50** | | | | | 12,5 | 4,25 | 20 | | | | 0,25 | 2,4 | 2,7 |
| | | | **180** | 105 | **75** | | | | | 10,5 | 3,4 | 16 | | | | 0,2 | 1,9 | 2,5 |
| | | | **230** | 155 | **75** | | | | | 14,5 | 5,1 | 24 | | | | 0,3 | 2,9 | 3,3 |
| | | | **230** | 130 | **100** | | | | | 12,5 | 4,25 | 20 | | | | 0,25 | 2,4 | 3,1 |
| | | | **230** | 105 | **125** | | | | | 10,5 | 3,4 | 16 | | | | 0,2 | 1,9 | 2,9 |

1) Only for "thick" top: see order codes
2) Numer of load-bearing rolling elements per side
For order designation, please see page 80

Example of order: RE.50.130.50



SKF

www.lmotion.ru lmotion-mail@ya.ru Тел.: (495)-921-34-60

# RE - NE - PE Precision slides with endplates B 100 - 150

(for product description, see page 31)

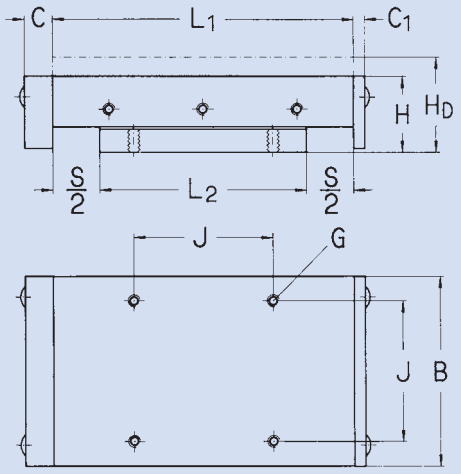


For detailed design, see pages 34-37

| Dimensions | | | | | | | | | | Load-carrying capacity | | | | | | | | Mass |
|---|---|---|---|---|---|---|---|---|---|---|---|---|---|---|---|---|---|---|
| | | | | | Stroke | | | | | RE | | | NE | | | PE | | |
| B | H | $H_D$ [1] | $L_1$ | $L_2$ | S | C | $C_1$ | G | J | $C_{eff}$ | $C_o$ | Z [2] | $C_{eff}$ | $C_o$ | Z [2] | $C_{eff}$ | $C_o$ | GG |
| mm | | | | | | | | | | kN | | - | kN | | - | kN | | kg |
| **100** | 40 | 50 | **260** | 210 | **50** | 15 | 6 | M6 | 74 | 54,2 | 8,8 | 15 | 44,2 | 8,8 | 53 | 0,54 | 5,3 | 6,7 |
| | | | **310** | 260 | **50** | | | | | 67,9 | 10,9 | 20 | 52,5 | 10,9 | 66 | 0,68 | 6,4 | 8 |
| | | | **360** | 310 | **50** | | | | | 80,8 | 13 | 25 | 60,9 | 13 | 80 | 0,81 | 7,5 | 9,4 |
| | | | **310** | 210 | **100** | | | | | 48,5 | 8,8 | 13 | 44,2 | 8,8 | 53 | 0,54 | 5,3 | 7,3 |
| | | | **360** | 260 | **100** | | | | | 62,5 | 10,9 | 18 | 52,5 | 10,9 | 66 | 0,68 | 6,4 | 8,7 |
| | | | **410** | 310 | **100** | | | | | 73,1 | 13 | 22 | 60,9 | 13 | 80 | 0,81 | 7,5 | 10 |
| | | | **360** | 210 | **150** | | | | | 42,6 | 8,8 | 11 | 44,2 | 8,8 | 53 | 0,54 | 5,3 | 8 |
| | | | **410** | 260 | **150** | | | | | 54,2 | 10,9 | 15 | 52,5 | 10,9 | 66 | 0,68 | 6,4 | 9,4 |
| | | | **460** | 310 | **150** | | | | | 67,9 | 13 | 20 | 60,9 | 13 | 80 | 0,81 | 7,5 | 11 |
| | | | **460** | 260 | **200** | | | | | 48,5 | 10,9 | 13 | 52,5 | 10,9 | 66 | 0,68 | 6,4 | 10 |
| **150** | 50 | 66 | **410** | 310 | **100** | 20 | 8 | M8 | 116 | 155 | 53 | 20 | 82,2 | 53,3 | 66 | 1,3 | 12,5 | 19 |
| | | | **510** | 410 | **100** | | | | | 202 | 71 | 28 | 103 | 66 | 88 | 1,8 | 16 | 25 |
| | | | **610** | 510 | **100** | | | | | 252 | 88 | 37 | 123 | 83,3 | 111 | 2,2 | 21 | 30 |
| | | | **510** | 310 | **200** | | | | | 131 | 53 | 16 | 82,2 | 53,3 | 66 | 1,3 | 12,5 | 22 |
| | | | **610** | 410 | **200** | | | | | 180 | 71 | 24 | 103 | 66 | 88 | 1,8 | 16 | 27 |
| | | | **710** | 510 | **200** | | | | | 230 | 88 | 33 | 123 | 83,3 | 111 | 2,2 | 21 | 32 |
| | | | **610** | 310 | **300** | | | | | 105 | 53 | 12 | 82,2 | 53,3 | 66 | 1,3 | 12,5 | 24 |
| | | | **710** | 410 | **300** | | | | | 156 | 71 | 20 | 103 | 66 | 88 | 1,8 | 16 | 29 |
| | | | **810** | 510 | **300** | | | | | 202 | 88 | 28 | 123 | 83,3 | 111 | 2,2 | 21 | 35 |
| | | | **810** | 410 | **400** | | | | | 131 | 71 | 16 | 103 | 66 | 88 | 1,8 | 16 | 32 |

1) Only for "thick" top: see order codes
2) Number of load-bearing rolling elements per side
For order designation, please see page 80

Example of order: NE.100.310.100

www.lmotion.ru lmotion-mail@ya.ru Тел.: (495)-921-34-60

# RE - NE - PE Precision slides with endplates B 200

(for product description, see page 31)

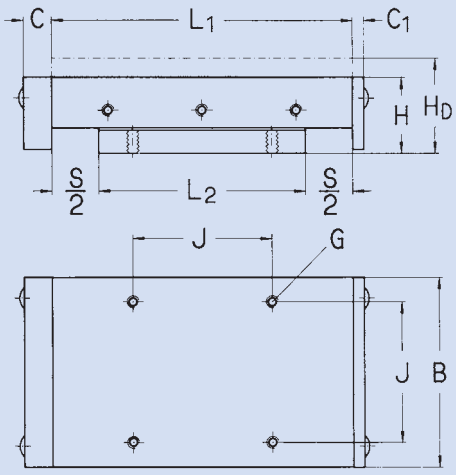


For detailed design, see pages 36-37

| Dimensions | | | | | | | | | | Load-carrying capacity | | | | | | | | Mass |
|---|---|---|---|---|---|---|---|---|---|---|---|---|---|---|---|---|---|---|
| | | | | | Stroke | | | | | RE | | | NE | | | PE | | |
| B | H | $H_D$ [1] | $L_1$ | $L_2$ | S | C | $C_1$ | G | J | $C_{eff}$ | $C_o$ | Z [2] | $C_{eff}$ | $C_o$ | Z [2] | $C_{eff}$ | $C_o$ | GG |
| mm | | | | | | | | | | kN | | - | kN | | - | kN | | kg |
| **200** | 60 | 75 | **410** | 310 | **100** | 20 | 8 | M8 | 154 | 156 | 53 | 20 | 82,2 | 49,5 | 66 | 1,3 | 12,5 | 31 |
| | | | **510** | 410 | **100** | | | | | 202 | 71 | 28 | 103 | 66 | 88 | 1,8 | 16 | 39 |
| | | | **610** | 510 | **100** | | | | | 252 | 88 | 37 | 123 | 83,3 | 111 | 2,2 | 21 | 48 |
| | | | **510** | 310 | **200** | | | | | 131 | 53 | 16 | 82,2 | 49,5 | 66 | 1,3 | 12,5 | 35 |
| | | | **610** | 410 | **200** | | | | | 180 | 71 | 24 | 103 | 66 | 88 | 1,8 | 16 | 43 |
| | | | **710** | 510 | **200** | | | | | 230 | 88 | 33 | 123 | 83,3 | 111 | 2,2 | 21 | 52 |
| | | | **610** | 310 | **300** | | | | | 105 | 53 | 12 | 82,2 | 49,5 | 66 | 1,3 | 12,5 | 38 |
| | | | **710** | 410 | **300** | | | | | 156 | 71 | 20 | 103 | 66 | 88 | 1,8 | 18 | 47 |
| | | | **810** | 510 | **300** | | | | | 202 | 88 | 28 | 123 | 83,3 | 111 | 2,2 | 21 | 55 |
| | | | **810** | 410 | **400** | | | | | 131 | 53 | 16 | 103 | 66 | 88 | 1,8 | 16 | 51 |
| | | | **910** | 510 | **400** | | | | | 180 | 71 | 24 | 123 | 83,3 | 111 | 2,2 | 21 | 59 |

1) Only for "thick" top: see order codes
2) Number of load-bearing rolling elements per side
For order designation, please see page 80

Example of order: RE.200.510.200

www.lmotion.ru lmotion-mail@ya.ru Тел.: (495)-921-34-60

# RE - NE - PE Precision slides with endplates B 300

(for product description, see page 31)

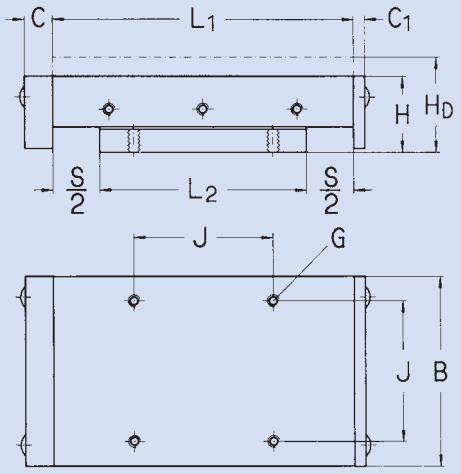


For detailed design, see pages 38-39

| Dimensions | | | | | | | | | | Load-carrying capacity | | | | | | | | Mass |
|---|---|---|---|---|---|---|---|---|---|---|---|---|---|---|---|---|---|---|
| | | | | | Stroke | | | | | RE | | | NE | | | PE | | |
| B | H | $H_D$ [1] | $L_1$ | $L_2$ | S | C | $C_1$ | G | J | $C_{eff}$ | $C_o$ | Z [2] | $C_{eff}$ | $C_o$ | Z [2] | $C_{eff}$ | $C_o$ | GG |
| mm | | | | | | | | | | kN | | - | kN | | - | kN | | kg |
| **300** | 75 | 95 | **515** | 415 | **100** | 22 | 10 | M10 | 245 | 58 | 58 | 19 | 173 | 106 | 72 | 2,7 | 24 | 75 |
| | | | **615** | 515 | **100** | | | | | 69 | 73 | 24 | 206 | 132 | 90 | 3,3 | 30 | 91 |
| | | | **515** | 315 | **200** | | | | | 35 | 31 | 10 | 138 | 79,2 | 54 | 2 | 18 | 67 |
| | | | **615** | 415 | **200** | | | | | 50 | 49 | 16 | 173 | 106 | 72 | 2,7 | 24 | 83 |
| | | | **715** | 515 | **200** | | | | | 62 | 64 | 21 | 206 | 132 | 90 | 3,3 | 30 | 98 |
| | | | **615** | 315 | **300** | | | | | 29 | 24 | 8 | 138 | 79,2 | 54 | 2 | 18 | 75 |
| | | | **715** | 415 | **300** | | | | | 43 | 40 | 13 | 173 | 106 | 72 | 2,7 | 24 | 90 |
| | | | **815** | 515 | **300** | | | | | 58 | 58 | 19 | 206 | 132 | 90 | 3,3 | 30 | 106 |
| | | | **815** | 415 | **400** | | | | | 35 | 31 | 10 | 173 | 106 | 72 | 2,7 | 24 | 98 |
| | | | **915** | 515 | **400** | | | | | 50 | 49 | 16 | 206 | 132 | 90 | 3,3 | 30 | 114 |

1) Only for "thick" top: see order codes
2) Number of load-bearing rolling elements per side
For order designation, please see page 80

Example of order: NE.300.815.400

www.lmotion.ru lmotion-mail@ya.ru Тел.: (495)-921-34-60

# RS. - NS. - PS. Precision tables for manual operation
## B 50 - 75 (for product description, see page 31)

Design RSM NSM PSM

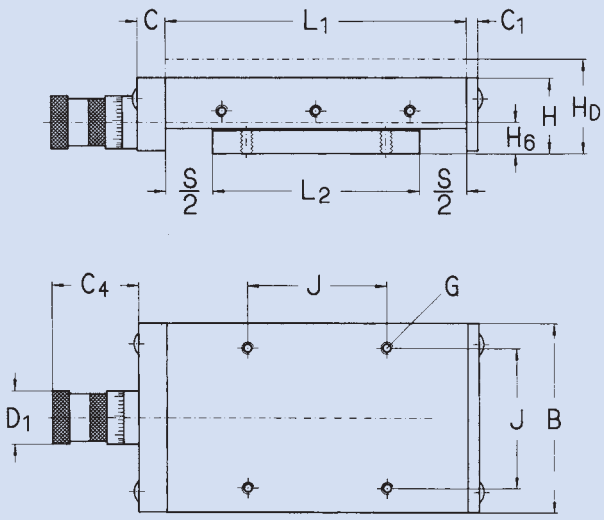


For detailed design, see pages 34-35

Dimensions

| B | H | $H_D$ [1] | $L_1$ | $L_2$ | Stroke S | C | $C_1$ | $C_4$ | $C_5$ |
|---|---|---|---|---|---|---|---|---|---|
| mm | | | | | | | | | |
| 50 | 25 | 35 | 80 | 55 | 25 | 14 | 5 | 37,5 | |
| | | | 130 | 105 | 25 | | | | |
| | | | 130 | 80 | 50 | | | | |
| | | | 130 | 55 | 75 | | | | |
| | | | 180 | 105 | 75 | | | | |
| | | | 180 | 80 | 100 | | | | |
| 75 | 32 | 44 | 130 | 105 | 25 | 15 | 6 | 46 | 88 |
| | | | 180 | 155 | 25 | | | | |
| | | | 180 | 130 | 50 | | | | |
| | | | 180 | 105 | 75 | | | | |
| | | | 230 | 155 | 75 | | | | |
| | | | 230 | 130 | 100 | | | | |
| | | | 230 | 105 | 125 | | | | |

1) Only for "thick" top: see order codes
For order designation: please see order codes, page 80

Example of order: RSM 50.80.25

www.lmotion.ru lmotion-mail@ya.ru Тел.: (495)-921-34-60

# RS. - NS. - PS. Precision tables for manual operation

Design RSK NSK PSK

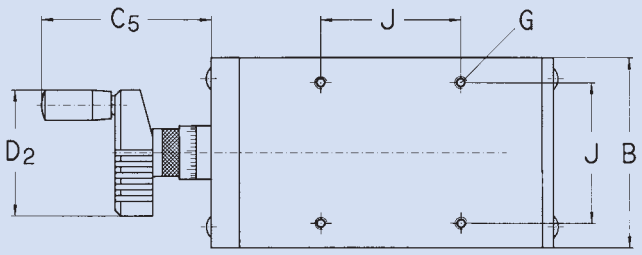


| Dimensions | | | | | | Load-carrying capacity | | | | | | | | Mass |
|---|---|---|---|---|---|---|---|---|---|---|---|---|---|---|
| | | | | | | RS | | | NS | | | PS | | |
| Ø Screw | $D_1$ | $D_2$ | G | $H_6$ | J | $C_{eff}$ | $C_o$ | Z[2] | $C_{eff}$ | $C_o$ | Z[2] | $C_{eff}$ | $C_o$ | GG |
| mm | | | | | | kN | | - | kN | | - | kN | | kg |
| M6 x 1 | 23 | - | M4 | 12,3 | 37 | 6,2 | 1,7 | 8 | - | - | - | 0,1 | 0,95 | 0,7 |
| | | | | | | 10,5 | 3,3 | 16 | | | | 0,2 | 1,9 | 1,1 |
| | | | | | | 8,4 | 2,5 | 12 | | | | 0,15 | 1,4 | 1 |
| | | | | | | 6,2 | 1,7 | 8 | | | | 0,1 | 0,95 | 0,9 |
| | | | | | | 10,5 | 3,3 | 16 | | | | 0,2 | 1,9 | 1,3 |
| | | | | | | 8,4 | 2,5 | 12 | | | | 0,15 | 1,4 | 1,2 |
| M10 x 1 | 30 | 71 | M4 | 15 | 62 | 10,5 | 3,4 | 16 | - | - | - | 0,2 | 1,9 | 2,2 |
| | | | | | | 14,5 | 5,1 | 24 | | | | 0,3 | 2,9 | 3 |
| | | | | | | 12,5 | 4,25 | 20 | | | | 0,25 | 2,4 | 2,8 |
| | | | | | | 10,5 | 3,4 | 16 | | | | 0,2 | 1,9 | 2,6 |
| | | | | | | 14,5 | 5,1 | 24 | | | | 0,3 | 2,9 | 3,4 |
| | | | | | | 12,5 | 4,25 | 20 | | | | 0,25 | 24 | 3,3 |
| | | | | | | 10,5 | 3,4 | 16 | | | | 0,2 | 1,9 | 3,1 |

2) Number of load-bearing rolling elements per side

www.lmotion.ru lmotion-mail@ya.ru Тел.: (495)-921-34-60

# RS. - NS. - PS. Precision tables for manual operation B 100 - 150 (for product description, see page 31)

Design RSM NSM PSM

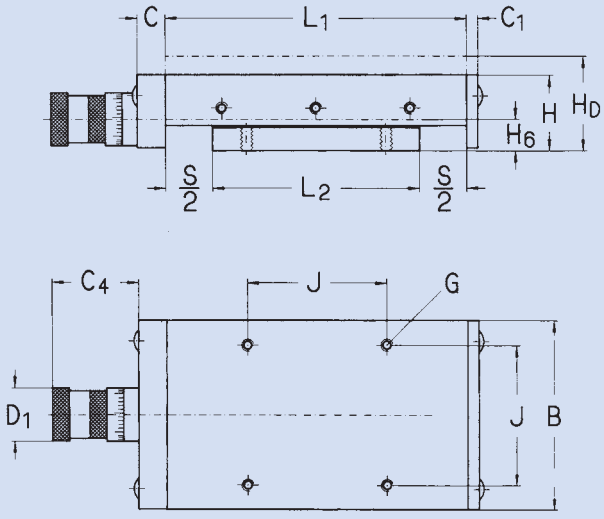


For detailed design, see pages 34-37

Dimensions

| B | H | $H_D$ 1) | $L_1$ | $L_2$ | Stroke S | C | $C_1$ | $C_4$ | $C_5$ |
|---|---|---|---|---|---|---|---|---|---|
| mm | | | | | | | | | |
| **100** | 40 | 50 | **260** | 210 | **50** | 15 | 6 | 46 | 88 |
| | | | **310** | 260 | **50** | | | | |
| | | | **360** | 210 | **100** | | | | |
| | | | **310** | 210 | **100** | | | | |
| | | | **360** | 260 | **100** | | | | |
| | | | **410** | 310 | **100** | | | | |
| | | | **360** | 210 | **150** | | | | |
| | | | **410** | 260 | **150** | | | | |
| | | | **460** | 310 | **150** | | | | |
| | | | **460** | 260 | **200** | | | | |
| **150** | 50 | 66 | **410** | 310 | **100** | 20 | 8 | 63 | 122 |
| | | | **510** | 410 | **100** | | | | |
| | | | **610** | 510 | **100** | | | | |
| | | | **510** | 310 | **200** | | | | |
| | | | **610** | 410 | **200** | | | | |
| | | | **710** | 510 | **200** | | | | |
| | | | **610** | 310 | **300** | | | | |
| | | | **710** | 410 | **300** | | | | |
| | | | **810** | 510 | **300** | | | | |
| | | | **810** | 410 | **400** | | | | |

1) Only for "thick" top: see order codes
For order designation: please see order codes, page 80

Example of order: NSK.100.260.50

www.lmotion.ru lmotion-mail@ya.ru Тел.: (495)-921-34-60

# RS. - NS. - PS. Precision tables for manual operation

Design RSK NSK PSK

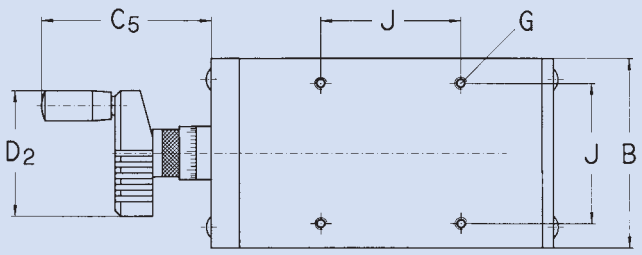


| Dimensions | | | | | | Load-carrying capacity | | | | | | | | Mass |
|---|---|---|---|---|---|---|---|---|---|---|---|---|---|---|
| | | | | | | RS | | | NS | | | PS | | |
| Ø Screw | $D_1$ | $D_2$ | G | $H_6$ | J | $C_{eff}$ | $C_o$ | Z[2] | $C_{eff}$ | $C_o$ | Z[2] | $C_{eff}$ | $C_o$ | GG |
| mm | | | | | | kN | | - | kN | | - | kN | | kg |
| M10 x 1 | 30 | 71 | M6 | 15.5 | 74 | 54,2 | 8,8 | 15 | 44,2 | 8,8 | 53 | 0,54 | 5,3 | 6,8 |
| | | | | | | 67,9 | 10,9 | 20 | 52,5 | 10,9 | 66 | 0,68 | 6,4 | 8,2 |
| | | | | | | 80,8 | 13 | 25 | 60,9 | 13 | 80 | 0,81 | 7,5 | 9,6 |
| | | | | | | 48,5 | 8,8 | 13 | 44,2 | 8,8 | 53 | 0,54 | 5,3 | 7,5 |
| | | | | | | 62,5 | 10,9 | 18 | 52,5 | 10,9 | 66 | 0,68 | 6,4 | 8,9 |
| | | | | | | 73,1 | 13 | 22 | 60,9 | 13 | 80 | 0,81 | 7,5 | 10 |
| | | | | | | 42,6 | 8,8 | 11 | 44,2 | 8,8 | 53 | 0,54 | 5,3 | 8,2 |
| | | | | | | 54,2 | 10,9 | 15 | 52,5 | 10,9 | 66 | 0,68 | 6,4 | 9,6 |
| | | | | | | 67,9 | 13 | 20 | 60,9 | 13 | 80 | 0,81 | 7,5 | 11 |
| | | | | | | 48,5 | 10,9 | 13 | 52,5 | 10,9 | 66 | 0,68 | 6,4 | 10 |
| Tr16 x 2 | 47 | 102 | M8 | 24 | 116 | 155 | 53 | 20 | 82,2 | 53,3 | 66 | 1,3 | 12,5 | 20 |
| | | | | | | 202 | 71 | 28 | 103 | 66 | 88 | 1,8 | 16 | 25 |
| | | | | | | 252 | 88 | 37 | 123 | 83,3 | 111 | 2,2 | 21 | 30 |
| | | | | | | 131 | 53 | 16 | 82,2 | 53,3 | 66 | 1,3 | 12,5 | 22 |
| | | | | | | 180 | 71 | 24 | 103 | 66 | 88 | 1,8 | 16 | 28 |
| | | | | | | 230 | 88 | 33 | 123 | 83,3 | 111 | 2,2 | 21 | 33 |
| | | | | | | 105 | 53 | 182 | 82,2 | 53,3 | 66 | 1,3 | 12,5 | 25 |
| | | | | | | 156 | 71 | 20 | 103 | 66 | 88 | 1,8 | 16 | 30 |
| | | | | | | 202 | 88 | 28 | 123 | 83,3 | 111 | 2,2 | 21 | 36 |
| | | | | | | 131 | 71 | 16 | 103 | 66 | 88 | 1,8 | 16 | 33 |

2) Number of load-bearing rolling elements per side

www.lmotion.ru lmotion-mail@ya.ru Тел.: (495)-921-34-60

# RS. - NS. - PS. Precision tables for manual operation
## B 200 (for product description, see page 31)

Design RSM
NSM
PSM

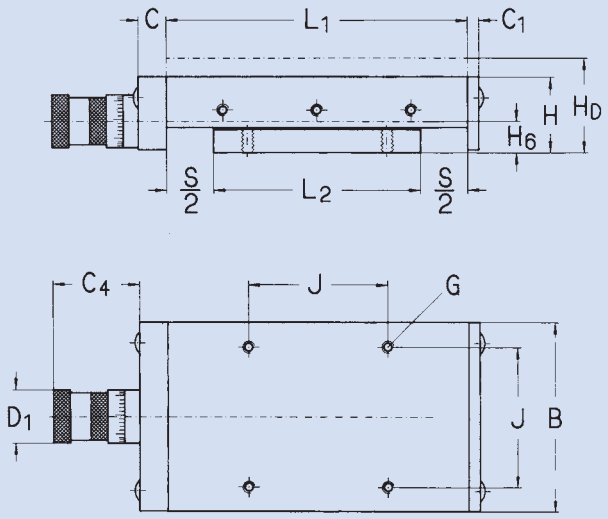


For detailed design, see pages 36-37

Dimensions

| B | H | $H_D$ [1] | $L_1$ | $L_2$ | Stroke S | C | $C_1$ | $C_4$ | $C_5$ |
|---|---|---|---|---|---|---|---|---|---|
| mm | | | | | | | | | |
| 200 | 60 | 75 | 410 | 310 | 100 | 20 | 8 | 63 | 122 |
| | | | 510 | 410 | 100 | | | | |
| | | | 610 | 510 | 100 | | | | |
| | | | 510 | 310 | 200 | | | | |
| | | | 610 | 410 | 200 | | | | |
| | | | 710 | 510 | 200 | | | | |
| | | | 610 | 610 | 300 | | | | |
| | | | 710 | 410 | 300 | | | | |
| | | | 810 | 510 | 300 | | | | |
| | | | 810 | 410 | 400 | | | | |
| | | | 910 | 510 | 400 | | | | |

1) Only for "thick" top: see order codes
For order designation: please see order codes, page 81

Example of order: PSM 200.710.300.D

www.lmotion.ru lmotion-mail@ya.ru Тел.: (495)-921-34-60

# RS. - NS. - PS. Precision tables for manual operation

Design RSK NSK PSK

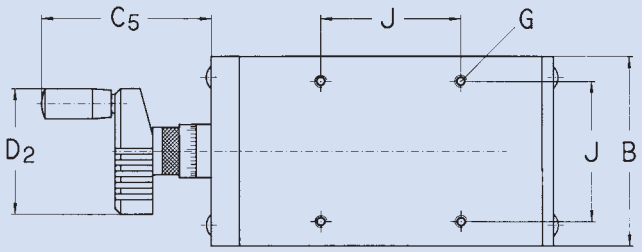


| Dimensions | | | | | | Load-carrying capacity | | | | | | | | Mass |
|---|---|---|---|---|---|---|---|---|---|---|---|---|---|---|
| | | | | | | RS | | | NS | | | PS | | |
| Ø Screw | $D_1$ | $D_2$ | G | $H_6$ | J | $C_{eff}$ | $C_o$ | Z[2] | $C_{eff}$ | $C_o$ | Z[2] | $C_{eff}$ | $C_o$ | GG |
| mm | | | | | | kN | | - | kN | | - | kN | | kg |
| TR16 x 2 | 47 | 102 | M8 | 25 | 154 | 156 | 53 | 20 | 82,2 | 49,5 | 66 | 1,3 | 12,5 | 31 |
| | | | | | | 202 | 71 | 28 | 103 | 66 | 88 | 1,8 | 16 | 40 |
| | | | | | | 252 | 88 | 37 | 123 | 83,3 | 111 | 2,2 | 21 | 48 |
| | | | | | | 131 | 53 | 16 | 82,2 | 49,5 | 66 | 1,3 | 12,5 | 35 |
| | | | | | | 180 | 71 | 24 | 103 | 66 | 88 | 1,8 | 16 | 44 |
| | | | | | | 230 | 88 | 33 | 123 | 83,3 | 111 | 2,2 | 21 | 52 |
| | | | | | | 105 | 53 | 12 | 82,2 | 49,5 | 66 | 1,3 | 12,5 | 39 |
| | | | | | | 156 | 71 | 20 | 103 | 66 | 88 | 1,8 | 16 | 48 |
| | | | | | | 202 | 88 | 28 | 123 | 83,3 | 111 | 2,2 | 21 | 56 |
| | | | | | | 131 | 53 | 16 | 103 | 66 | 88 | 1,8 | 16 | 52 |
| | | | | | | 180 | 71 | 24 | 123 | 83,3 | 111 | 2,2 | 21 | 60 |

2) Number of load-bearing rolling elements per side

www.lmotion.ru lmotion-mail@ya.ru Тел.: (495)-921-34-60

# RS. - NS. - PS. Precision tables for manual operation
## B 300 (for product description, see page 31)

Design RSM
NSM
PSM

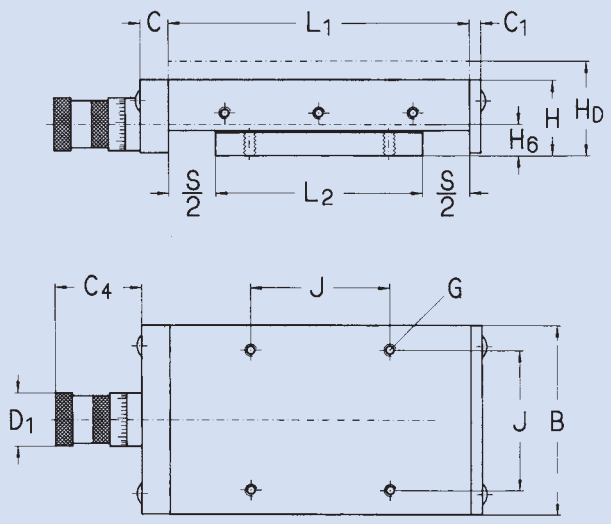


For detailed design, see pages 38-39

Dimensions

| B | H | $H_D$ [1] | $L_1$ | $L_2$ | Stroke S | C | $C_1$ | $C_4$ | $C_5$ |
|---|---|---|---|---|---|---|---|---|---|
| mm | | | | | | | | | |
| 300 | 75 | 95 | 515 | 415 | 100 | 22 | 10 | 63 | 122 |
| | | | 615 | 515 | 100 | | | | |
| | | | 515 | 315 | 200 | | | | |
| | | | 615 | 415 | 200 | | | | |
| | | | 715 | 515 | 200 | | | | |
| | | | 615 | 315 | 300 | | | | |
| | | | 715 | 415 | 300 | | | | |
| | | | 815 | 515 | 300 | | | | |
| | | | 815 | 415 | 400 | | | | |
| | | | 915 | 515 | 400 | | | | |

1) Only for "thick" top: see order codes
For order designation: please see order codes, page 80

Example of order: PSM 200.710.300.D

# RS. - NS. - PS. Precision tables for manual operation

Design RSK
NSK
PSK

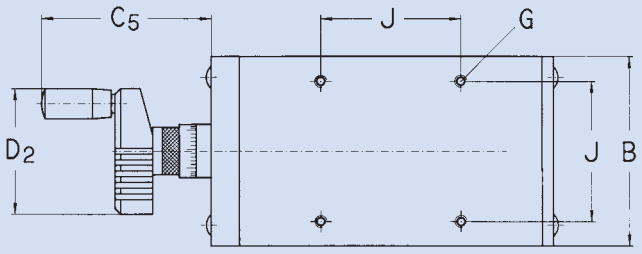


| Dimensions | | | | | | Load-carrying capacity | | | | | | | | Mass |
|---|---|---|---|---|---|---|---|---|---|---|---|---|---|---|
| Ø Screw | $D_1$ | $D_2$ | G | $H_6$ | J | RS $C_{eff}$ | $C_o$ | Z[2] | NS $C_{eff}$ | $C_o$ | Z[2] | PS $C_{eff}$ | $C_o$ | GG |
| mm | | | | | | kN | | - | kN | | - | kN | | kg |
| TR20 x 4 | 47 | 102 | M10 | 28 | 245 | 58 | 58 | 19 | 173 | 106 | 72 | 2,7 | 24 | 76 |
| | | | | | | 69 | 73 | 24 | 206 | 132 | 90 | 3,3 | 30 | 92 |
| | | | | | | 35 | 31 | 10 | 138 | 79,2 | 54 | 2 | 18 | 68 |
| | | | | | | 50 | 49 | 16 | 173 | 106 | 72 | 2,7 | 24 | 84 |
| | | | | | | 62 | 64 | 21 | 206 | 132 | 90 | 3,3 | 30 | 99 |
| | | | | | | 29 | 24 | 8 | 138 | 79.2 | 54 | 2 | 18 | 76 |
| | | | | | | 43 | 40 | 13 | 173 | 106 | 72 | 2,7 | 24 | 91 |
| | | | | | | 58 | 58 | 19 | 206 | 132 | 90 | 3,3 | 30 | 107 |
| | | | | | | 35 | 31 | 10 | 173 | 106 | 72 | 2,7 | 24 | 99 |
| | | | | | | 50 | 49 | 16 | 206 | 132 | 90 | 3,3 | 30 | 115 |

2) Number of load-bearing rolling elements per side

www.lmotion.ru lmotion-mail@ya.ru Тел.: (495)-921-34-60

# RSS - NSS - PSS Precision tables for motor drive B 100

(for product description, see page 32)

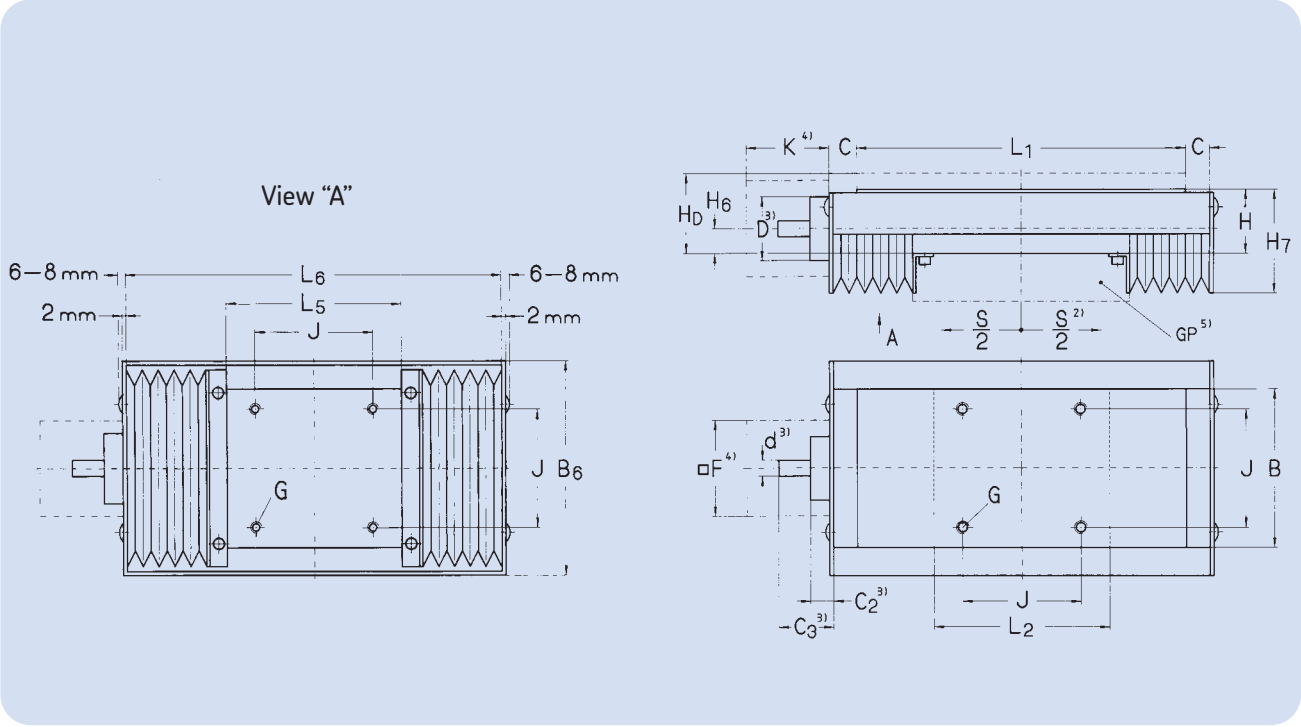


For detailed design, see page 34
For screw selection, see page 64

| Dimensions | | | | | | | | | | | | | |
|---|---|---|---|---|---|---|---|---|---|---|---|---|---|
| B | H | $H_D$ 1) | $L_1$ | $L_2$ | Nominal stroke S 2) | C | $B_6$ | G | $H_6$ | $H_7$ | J | $L_5$ | $L_6$ |
| mm | | | | | | | | | | | | | |
| **100** | 40 | 50 | **260** | 210 | **50** | 15 | 164 | M6 | 15,5 | 65 | 74 | 160 | 290 |
| | | | **310** | 260 | **50** | | | | | | | 210 | 340 |
| | | | **360** | 310 | **50** | | | | | | | 260 | 390 |
| | | | **310** | 210 | **100** | | | | | | | 160 | 340 |
| | | | **360** | 260 | **100** | | | | | | | 210 | 390 |
| | | | **410** | 310 | **100** | | | | | | | 260 | 440 |
| | | | **360** | 210 | **150** | | | | | | | 160 | 390 |
| | | | **410** | 260 | **150** | | | | | | | 210 | 440 |
| | | | **460** | 310 | **150** | | | | | | | 260 | 490 |
| | | | **460** | 260 | **200** | | | | | | | 210 | 490 |

1) Only for "thick" top: see order codes
2) Nominal stroke = max. stroke between the end stops.
Effective stroke between the limit switches 5-20 mm shorter, depending on speed
3) For screw abutment dimensions, see page 65
4) For dimensions, see motor flange Table, pages 76 and 78
5) GP = base plate, see page 72

# RSS - NSS - PSS Precision tables for motor drive

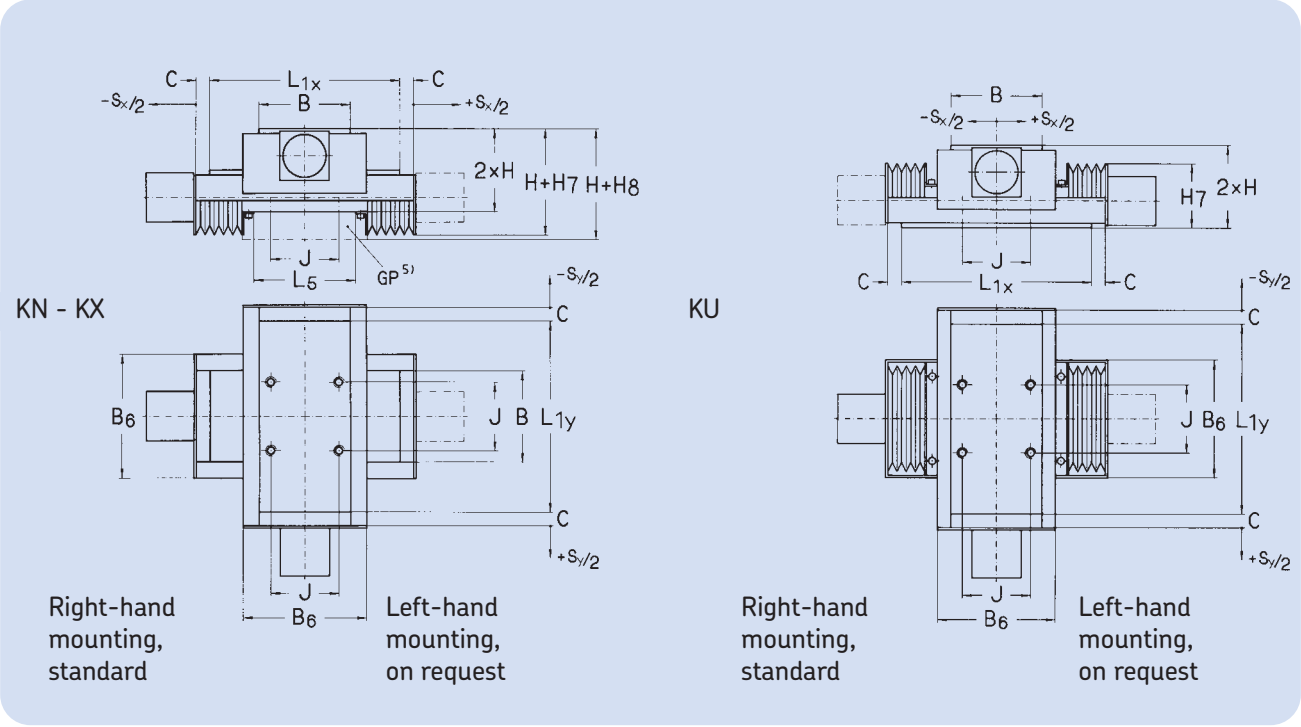


| Load-carrying capacity | | | | | | | | Masses[7] | | Cross table assembly |
|---|---|---|---|---|---|---|---|---|---|---|
| RSS $C_{eff}$ | $C_o$ | Z[6] | NSS $C_{eff}$ | $C_o$ | Z[6] | PSS $C_{eff}$ | $C_o$ | GG | GO | Assembly type[8] KN - KX |
| mm | | - | kN | | - | kN | | kg | | - |
| 54,2 | 8,8 | 15 | 44,2 | 8,8 | 53 | 0,54 | 5,3 | 7,8 | 4,8 | X |
| 67,9 | 10,9 | 20 | 52,5 | 10,9 | 66 | 0,68 | 6,4 | 9,3 | 5,6 | |
| 80,8 | 13 | 25 | 60,9 | 13 | 80 | 0,81 | 7,5 | 11 | 6,5 | |
| 48,5 | 8,8 | 13 | 44,2 | 8,8 | 53 | 0,54 | 5,3 | 8,6 | 5,6 | X |
| 62,5 | 10,9 | 18 | 52,5 | 10,9 | 66 | 0,68 | 6,4 | 10 | 6,5 | |
| 73,1 | 13 | 22 | 60,9 | 13 | 80 | 0,81 | 7,5 | 12 | 7,3 | |
| 42,6 | 8,8 | 11 | 44,2 | 8,8 | 53 | 0,54 | 5,3 | 9,5 | 6,5 | X |
| 54,2 | 10,9 | 15 | 52,5 | 10,9 | 66 | 0,68 | 6,4 | 11 | 7,3 | |
| 67,9 | 13 | 20 | 60,9 | 13 | 80 | 0,81 | 7,5 | 13 | 8,2 | |
| 48,5 | 10,9 | 13 | 52,5 | 10,9 | 66 | 0,68 | 6,4 | 12 | 8,2 | |

6) Number of load-bearing rolling elements per side
7) GG = total mass of slide
GO = mass moved linearly with travelling slide top
For order designation: see order codes, page 80

8) X denotes: cannot be used for
cross table assembly KU - KX: as Y-axis
cross table assembly KU: as X and Y-axis
Example of order: RSS 100.310.100.R0804

www.lmotion.ru lmotion-mail@ya.ru Тел.: (495)-921-34-60

# RSS - NSS - PSS Precision tables for motor drive B 150

(for product description, see page 32)

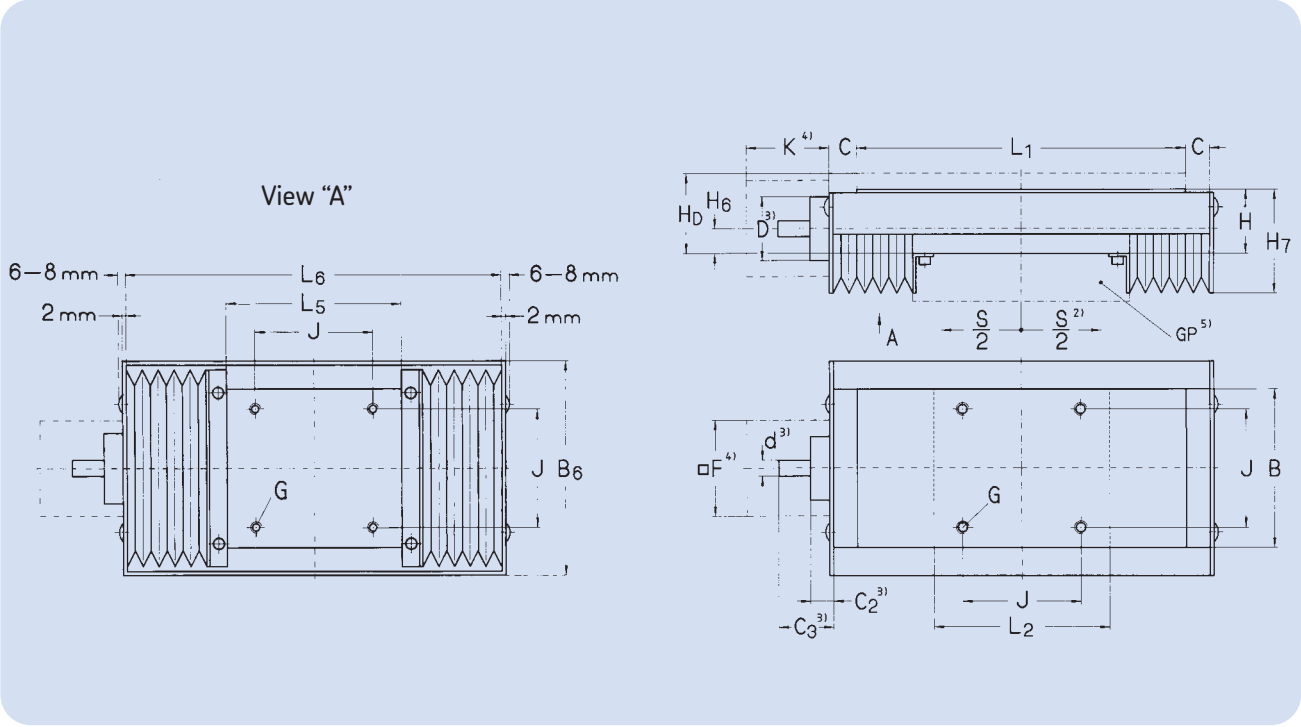


For detailed design, see page 36
For screw selection, see page 64

| Dimensions | | | | | | | | | | | | | |
|---|---|---|---|---|---|---|---|---|---|---|---|---|---|
| B | H | $H_D$ 1) | $L_1$ | $L_2$ | Nominal stroke S 2) | C | $B_6$ | G | $H_6$ | $H_7$ | J | $L_5$ | $L_6$ |
| mm | | | | | | | | | | | | | |
| **150** | 50 | 66 | **410** | 310 | **100** | 20 | 214 | M8 | 24 | 75 | 116 | 250 | 450 |
| | | | **510** | 410 | **100** | | | | | | | 340 | 550 |
| | | | **610** | 510 | **100** | | | | | | | 440 | 650 |
| | | | **510** | 310 | **200** | | | | | | | 250 | 550 |
| | | | **610** | 410 | **200** | | | | | | | 340 | 650 |
| | | | **710** | 510 | **200** | | | | | | | 440 | 750 |
| | | | **610** | 310 | **300** | | | | | | | 250 | 650 |
| | | | **710** | 410 | **300** | | | | | | | 340 | 750 |
| | | | **810** | 510 | **300** | | | | | | | 440 | 850 |
| | | | **810** | 410 | **400** | | | | | | | 340 | 850 |

1) Only for "thick" top: see order codes
2) Nominal stroke = max. stroke between the end stops.
Effective stroke between the limit switches 5-20 mm shorter, depending on speed
3) For screw abutment dimensions, see page 65
4) For dimensions, see motor flange Table, pages 76 and 78
5) GP = base plate, see page 72

www.lmotion.ru lmotion-mail@ya.ru Тел.: (495)-921-34-60

# RSS - NSS - PSS Precision tables for motor drive

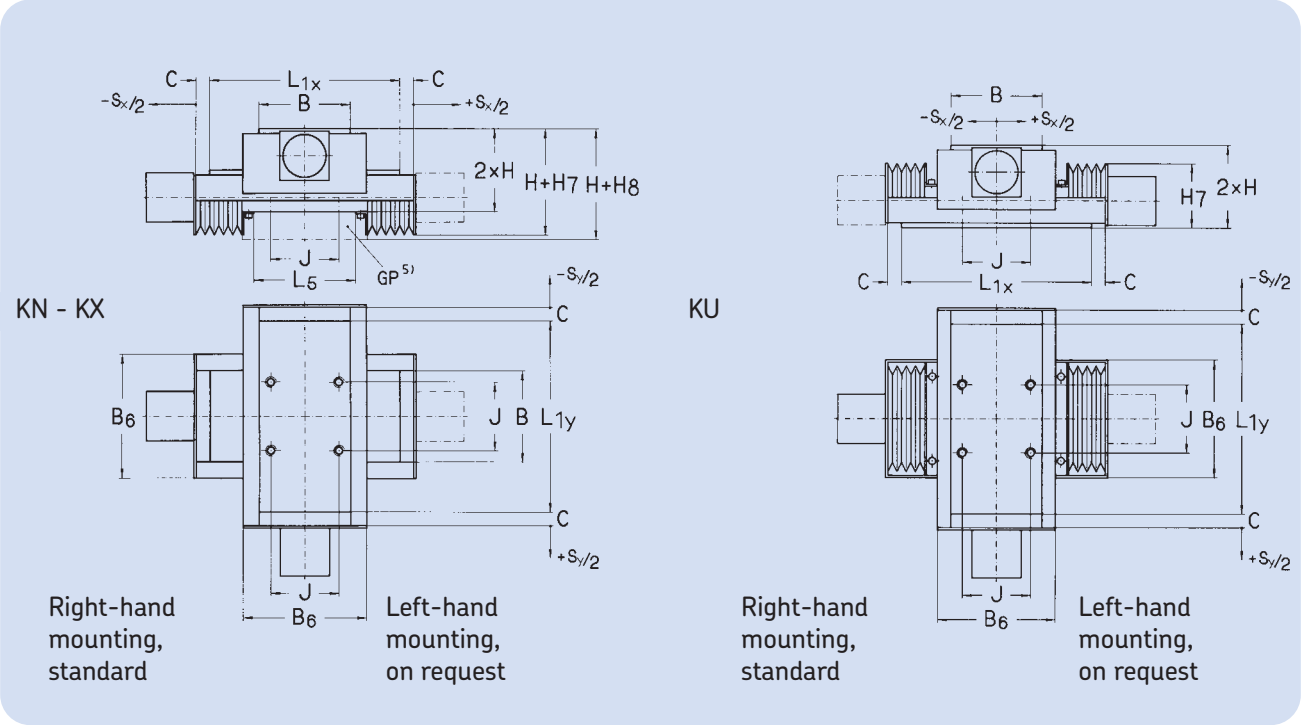


| Load-carrying capacity | | | | | | | | Masses[7] | | Cross table assembly |
|---|---|---|---|---|---|---|---|---|---|---|
| RSS $C_{eff}$ | $C_o$ | Z[6] | NSS $C_{eff}$ | $C_o$ | Z[6] | PSS $C_{eff}$ | $C_o$ | GG | GO | Assembly type[8] KN - KX |
| mm | | - | kN | | - | kN | | kg | | - |
| 155 | 53 | 20 | 82,2 | 53,3 | 66 | 1,3 | 12,5 | 22 | 13 | |
| 202 | 71 | 28 | 103 | 66 | 88 | 1,8 | 16 | 27 | 16 | |
| 252 | 88 | 37 | 123 | 83,3 | 111 | 2,2 | 21 | 33 | 19 | |
| 131 | 53 | 16 | 82,2 | 53,3 | 66 | 1,3 | 12,5 | 25 | 16 | |
| 180 | 71 | 24 | 103 | 66 | 88 | 1,8 | 16 | 30 | 19 | |
| 230 | 88 | 33 | 123 | 83,3 | 111 | 2,2 | 21 | 36 | 22 | |
| 105 | 53 | 12 | 82,2 | 53,3 | 66 | 1,3 | 12,5 | 28 | 19 | |
| 156 | 71 | 20 | 103 | 66 | 88 | 1,8 | 16 | 33 | 22 | |
| 202 | 88 | 28 | 123 | 83,3 | 111 | 2,2 | 21 | 39 | 25 | |
| 131 | 71 | 16 | 103 | 66 | 88 | 1,8 | 16 | 36 | 25 | |

6) Number of load-bearing rolling elements per side
7) GG = total mass of slide
GO = mass moved linearly with travelling slide top
For order designation: see order codes, page 80

8) X denotes: cannot be used for
cross table assembly KU - KX: as Y-axis
cross table assembly KU: as X and Y-axis
Example of order: RSS 150.410.100.R1202

www.lmotion.ru lmotion-mail@ya.ru Тел.: (495)-921-34-60

# RSS - NSS - PSS Precision tables for motor drive B 200

(for product description, see page 32)

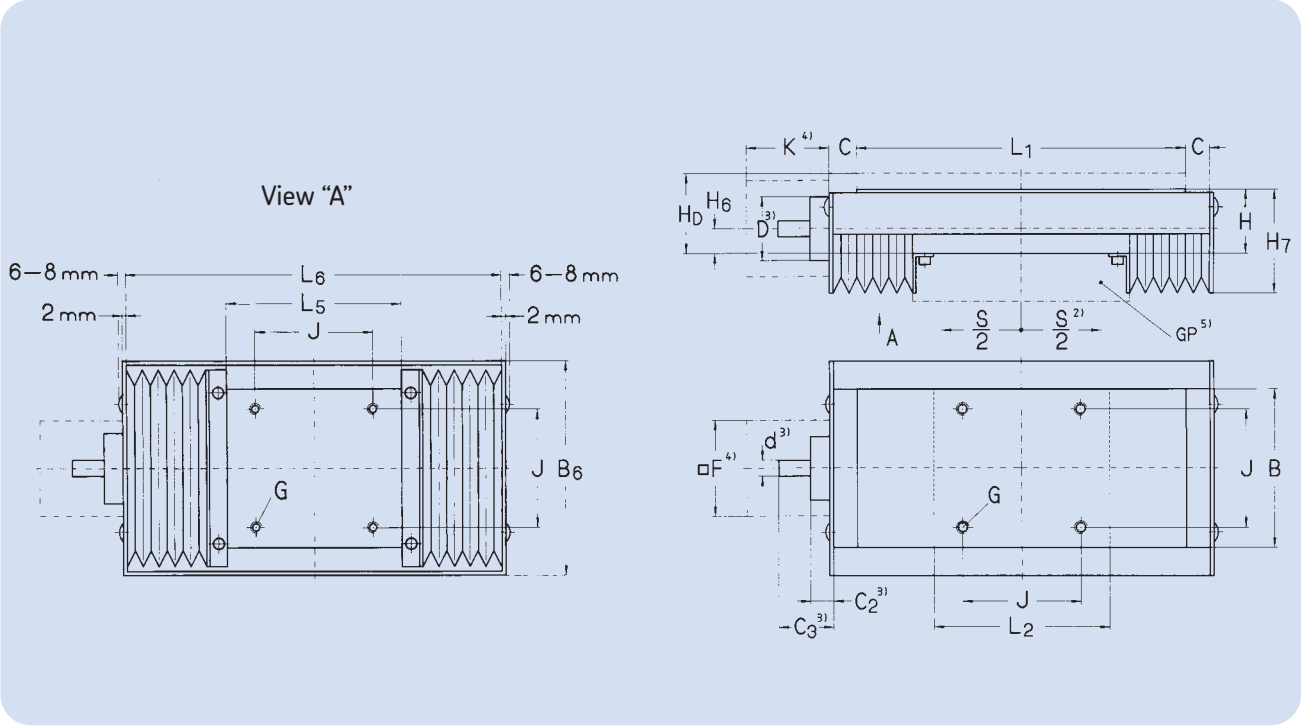


For detailed design, see page 36
For screw selection, see page 64

| Dimensions | | | | | | | | | | | | | |
|---|---|---|---|---|---|---|---|---|---|---|---|---|---|
| B | H | $H_D$ 1) | $L_1$ | $L_2$ | Nominal stroke S 2) | C | $B_6$ | G | $H_6$ | $H_7$ | J | $L_5$ | $L_6$ |
| mm | | | | | | | | | | | | | |
| **200** | 60 | 75 | **410** | 310 | **100** | 20 | 264 | M8 | 25 | 85 | 154 | 250 | 450 |
| | | | **510** | 410 | **100** | | | | | | | 340 | 550 |
| | | | **610** | 510 | **100** | | | | | | | 420 | 650 |
| | | | **510** | 310 | **200** | | | | | | | 250 | 550 |
| | | | **610** | 410 | **200** | | | | | | | 340 | 650 |
| | | | **710** | 510 | **200** | | | | | | | 420 | 750 |
| | | | **610** | 310 | **300** | | | | | | | 250 | 650 |
| | | | **710** | 410 | **300** | | | | | | | 340 | 750 |
| | | | **810** | 510 | **300** | | | | | | | 420 | 850 |
| | | | **810** | 410 | **400** | | | | | | | 340 | 850 |
| | | | **910** | 510 | **400** | | | | | | | 420 | 950 |

1) Only for "thick" top: see order codes
2) Nominal stroke = max. stroke between the end stops.
Effective stroke between the limit switches 5-20 mm shorter, depending on speed
3) For screw abutment dimensions, see page 65
4) For dimensions, see motor flange Table, pages 76 and 78
5) GP = base plate, see page 72

# RSS - NSS - PSS Precision tables for motor drive

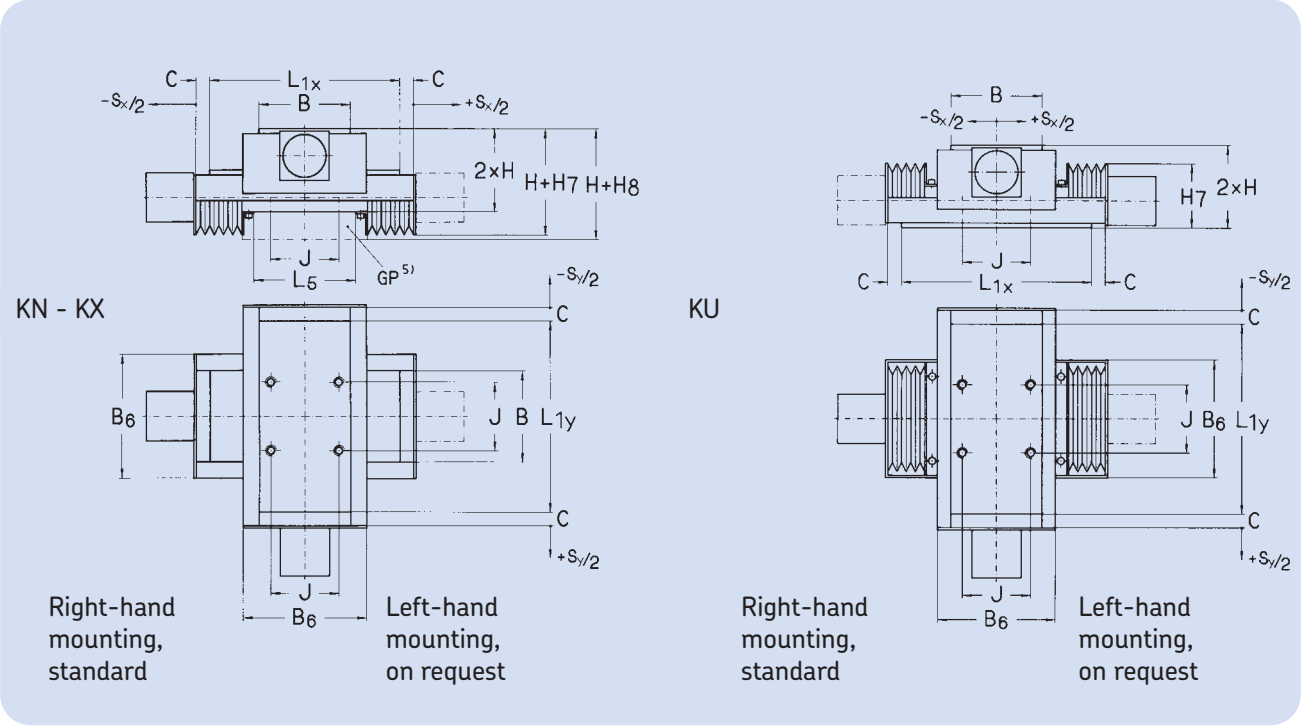


| Load-carrying capacity | | | | | | | | Masses[7] | | Cross table assembly |
|---|---|---|---|---|---|---|---|---|---|---|
| RSS $C_{eff}$ | $C_o$ | Z[6] | NSS $C_{eff}$ | $C_o$ | Z[6] | PSS $C_{eff}$ | $C_o$ | GG | GO | Assembly type[8] KN - KX |
| mm | | - | kN | | - | kN | | kg | | - |
| 156 | 53 | 20 | 82,2 | 49,5 | 66 | 1,3 | 12,5 | 34 | 19 | X |
| 202 | 71 | 28 | 103 | 33 | 88 | 1,8 | 16 | 43 | 23 | |
| 252 | 88 | 37 | 123 | 83,3 | 111 | 2,2 | 21 | 51 | 27 | |
| 131 | 53 | 16 | 82,2 | 49,5 | 66 | 1,3 | 12,5 | 38 | 23 | X |
| 180 | 71 | 24 | 103 | 66 | 88 | 1,8 | 16 | 47 | 28 | |
| 230 | 88 | 33 | 123 | 83,3 | 111 | 2,2 | 21 | 56 | 32 | |
| 105 | 53 | 12 | 82,2 | 49,5 | 66 | 1,3 | 12,5 | 42 | 28 | X |
| 156 | 71 | 20 | 103 | 66 | 88 | 1,8 | 16 | 51 | 32 | |
| 202 | 88 | 28 | 123 | 83,3 | 111 | 2,2 | 21 | 60 | 36 | |
| 131 | 53 | 16 | 103 | 66 | 88 | 1,8 | 16 | 56 | 36 | |
| 180 | 71 | 24 | 123 | 83,3 | 111 | 2,2 | 21 | 65 | 41 | |

6) Number of load-bearing rolling elements per side
7) GG = total mass of slide
GO = mass moved linearly with travelling slide top
For order designation: see order codes, page 80

8) X denotes: cannot be used for
cross table assembly KU - KX: as Y-axis
cross table assembly KU: as X and Y-axis
Example of order: NSS 200.710.200.R1205

www.lmotion.ru lmotion-mail@ya.ru Тел.: (495)-921-34-60

# RSS - NSS - PSS Precision tables for motor drive B 300 - 400 (for product description, see page 32)

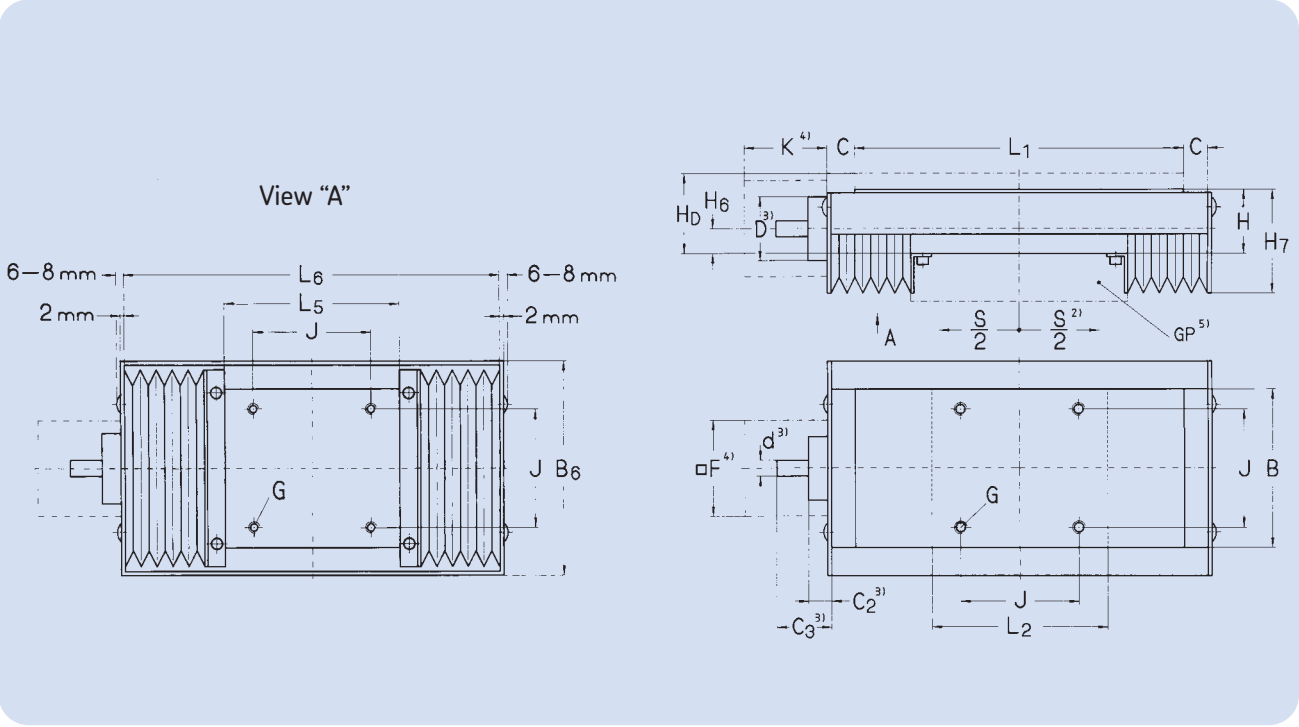


For detailed design, see page 38
For screw selection, see page 64

| Dimensions | | | | | | | | | | | | | |
|---|---|---|---|---|---|---|---|---|---|---|---|---|---|
| B | H | $H_D$ 1) | $L_1$ | $L_2$ | Nominal stroke S 2) | C | $B_6$ | G | $H_6$ | $H_7$ | J | $L_5$ | $L_6$ |
| mm | | | | | | | | | | | | | |
| **300** | 75 | 95 | **515** | 415 | 100 | 22 | 364 | M10 | 28 | 100 | 245 | 350 | 559 |
| | | | **615** | 515 | 100 | | | | | | | 435 | 659 |
| | | | **515** | 315 | 200 | | | | | | | 265 | 559 |
| | | | **615** | 415 | 200 | | | | | | | 350 | 659 |
| | | | **715** | 515 | 200 | | | | | | | 435 | 759 |
| | | | **615** | 315 | 300 | | | | | | | 265 | 659 |
| | | | **715** | 415 | 300 | | | | | | | 350 | 759 |
| | | | **815** | 515 | 300 | | | | | | | 435 | 859 |
| | | | **815** | 415 | 400 | | | | | | | 350 | 859 |
| | | | **915** | 515 | 400 | | | | | | | 435 | 959 |
| **400** | 100 | 125 | **615** | 515 | 100 | 30 | 464 | M12 | 38 | 125 | 340 | 455 | 675 |
| | | | **815** | 615 | 200 | | | | | | | 535 | 875 |
| | | | **815** | 515 | 300 | | | | | | | 455 | 875 |
| | | | **1 015** | 615 | 400 | | | | | | | 535 | 1 075 |
| | | | **1 015** | 515 | 500 | | | | | | | 455 | 1 075 |

1) Only for "thick" top: see order codes
2) Nominal stroke = max. stroke between the end stops.
Effective stroke between the limit switches 5-20 mm shorter, depending on speed
3) For screw abutment dimensions, see page 65
4) For dimensions, see motor flange Table, pages 76 and 78
5) GP = base plate, see page 72

# RSS - NSS - PSS Precision tables for motor drive

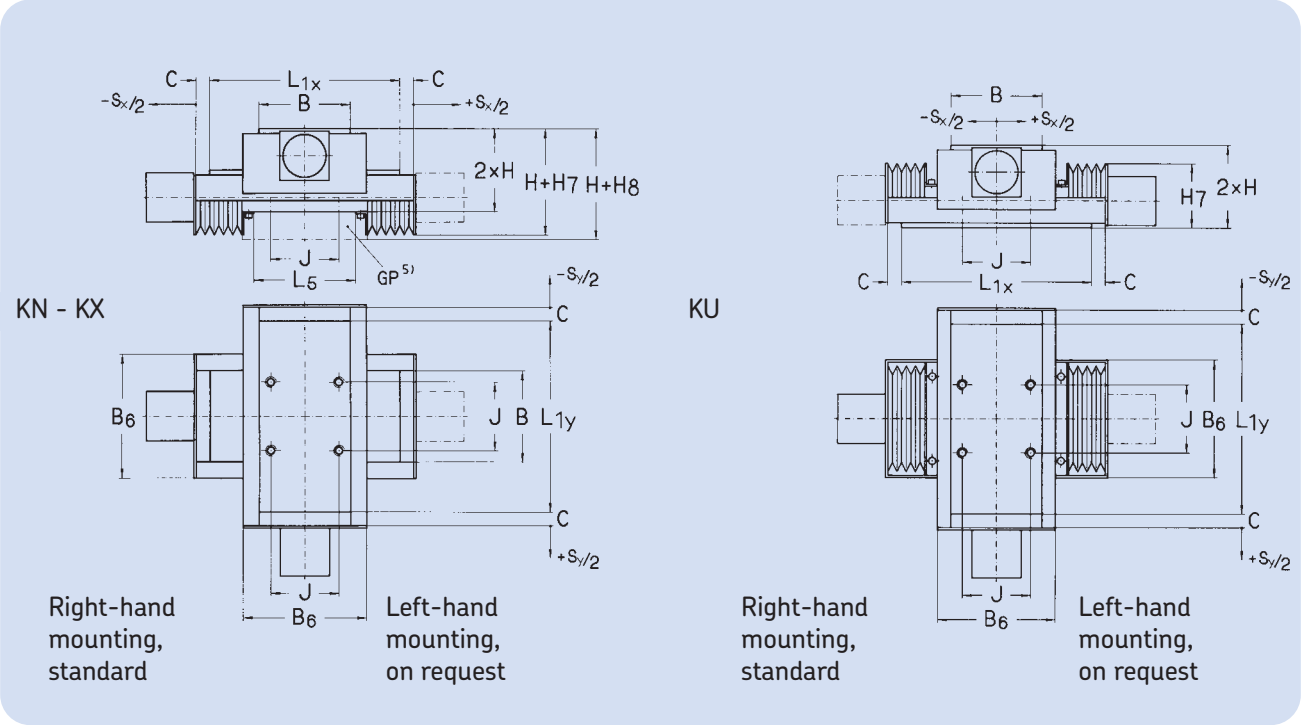


| Load-carrying capacity | | | | | | | | Masses[7] | | Cross table assembly |
|---|---|---|---|---|---|---|---|---|---|---|
| RSS $C_{eff}$ | $C_o$ | Z[6] | NSS $C_{eff}$ | $C_o$ | Z[6] | PSS $C_{eff}$ | $C_o$ | GG | GO | Assembly type[8] KN - KX |
| mm | | - | kN | | - | kN | | kg | | - |
| 58 | 58 | 19 | 173 | 106 | 72 | 2,7 | 24 | 79 | 45 | X |
| 69 | 73 | 24 | 206 | 132 | 90 | 3,3 | 30 | 96 | 54 | |
| 35 | 31 | 10 | 138 | 79,2 | 54 | 2 | 18 | 71 | 46 | |
| 50 | 49 | 16 | 173 | 106 | 72 | 2,7 | 24 | 88 | 54 | X |
| 62 | 64 | 21 | 206 | 132 | 90 | 3,3 | 30 | 104 | 62 | |
| 29 | 24 | 8 | 138 | 79,2 | 54 | 2 | 18 | 80 | 54 | |
| 43 | 40 | 13 | 173 | 106 | 72 | 2,7 | 24 | 96 | 62 | X |
| 58 | 58 | 19 | 206 | 132 | 90 | 3,3 | 30 | 112 | 70 | |
| 35 | 31 | 10 | 173 | 106 | 72 | 2,7 | 24 | 104 | 71 | X |
| 50 | 49 | 16 | 206 | 132 | 90 | 3,3 | 30 | 121 | 79 | |
| - | - | - | 314 | 198 | 83 | - | | 168 | 89 | X |
| | | | 362 | 238 | 100 | | | 210 | 116 | |
| | | | 314 | 198 | 83 | | | 195 | 116 | X |
| | | | 362 | 238 | 100 | | | 237 | 143 | |
| | | | 314 | 198 | 83 | | | 222 | 143 | X |

6) Number of load-bearing rolling elements per side
7) GG = total mass of slide
GO = mass moved linearly with travelling slide top
For order designation: see order codes, page 80

8) X denotes: cannot be used for
cross table assembly KU - KX: as Y-axis
cross table assembly KU: as X and Y-axis
Example of order: NSS 300.815.400.R1505

# RSAS - NSAS - PSAS Precision tables for motor drive, sealed B 100 - 150 (for product description, see page 33)

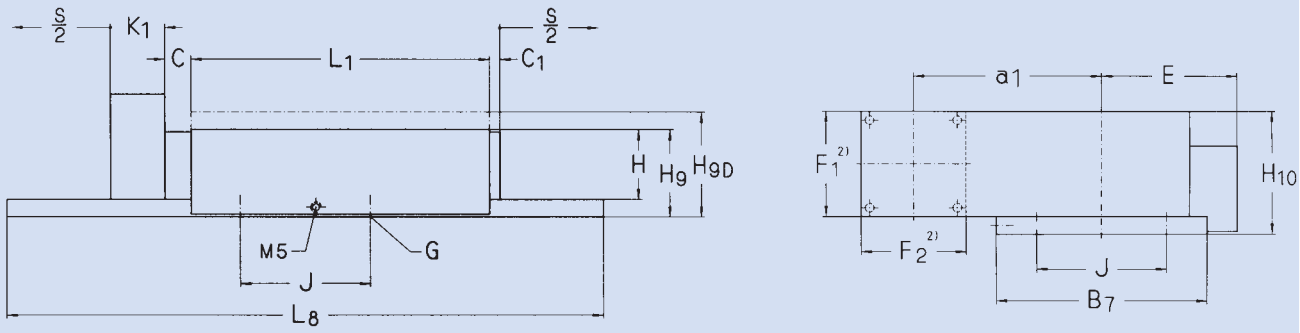


For detailed dimensions, see pages 34 and 36
For screw selection, see page 64

| Dimensions | | | | | | | | | | | | | |
|---|---|---|---|---|---|---|---|---|---|---|---|---|---|
| B | H | $L_1$ | $L_2$ | $L_8$ | Nominal stroke S[1] | $a_1$ | $B_7$ | C | $C_1$ | E | $F_1$ | $F_2$ | G |
| mm | | | | | | | | | | | | | |
| **100** | 40 | **260** | 210 | 385 | **50** | 117 | 120 | 15 | 6 | 82 | 60 | 60 | M6 |
| | | **310** | 260 | 435 | **50** | | | | | | | | |
| | | **360** | 310 | 485 | **50** | | | | | | | | |
| | | **310** | 210 | 485 | **100** | | | | | | | | |
| | | **360** | 260 | 535 | **400** | | | | | | | | |
| | | **410** | 310 | 585 | **100** | | | | | | | | |
| | | **360** | 210 | 585 | **150** | | | | | | | | |
| | | **410** | 360 | 635 | **150** | | | | | | | | |
| | | **460** | 310 | 685 | **150** | | | | | | | | |
| | | **460** | 260 | 735 | **200** | | | | | | | | |
| **150** | 50 | **410** | 310 | 600 | **100** | 154 | 170 | 20 | 8 | 107 | 85 | 85 | M8 |
| | | **510** | 410 | 700 | **100** | | | | | | | | |
| | | **610** | 510 | 800 | **100** | | | | | | | | |
| | | **510** | 310 | 800 | **200** | | | | | | | | |
| | | **610** | 410 | 900 | **200** | | | | | | | | |
| | | **710** | 510 | 1 000 | **300** | | | | | | | | |
| | | **610** | 310 | 1 000 | **300** | | | | | | | | |
| | | **710** | 410 | 1 100 | **300** | | | | | | | | |
| | | **810** | 510 | 1 200 | **300** | | | | | | | | |

1) Nominal stroke = max. stroke between the end stops. Effective stroke between the limit switches 5-20 mm shorter, depending on speed
For order designation: please see order codes, page 80 Example of order: NSAS 100.360.150.R0804

www.lmotion.ru lmotion-mail@ya.ru Тел.: (495)-921-34-60

# RSAS - NSAS - PSAS Precision tables for motor drive, sealed

Standard motor attachment
with toothed belt drive
i = 1:1
“Left-side” attachment type

Direct motor attachment also
possible for short strokes
with extended motor flange

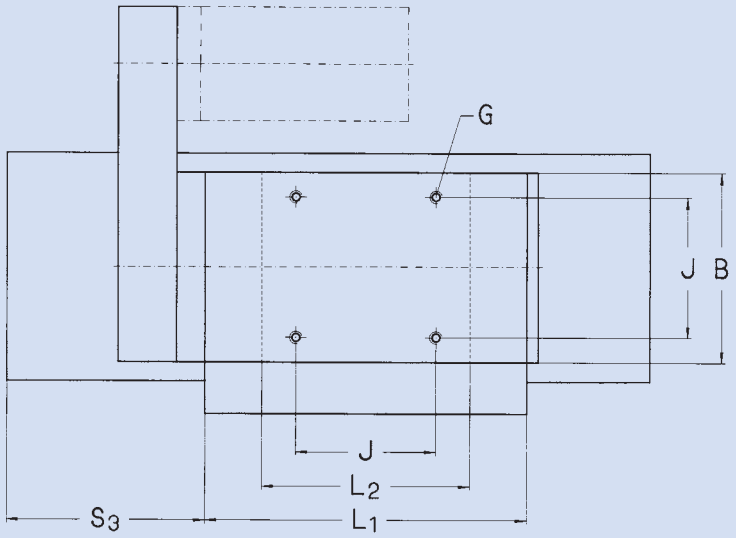


| Dimensions | | | | | | Load-carrying capacity | | | | | | | | Masses[5] | |
|---|---|---|---|---|---|---|---|---|---|---|---|---|---|---|---|
| | | | | | | RSAS | | | NSAS | | | PSAS | | | |
| $H_9$ | $H_{9D}$[3] | $H_{10}$ | J | $K_1$ | $S_3$ | $C_{eff}$ | $C_o$ | Z[4] | $C_{eff}$ | $C_o$ | C[4] | $C_{eff}$ | $C_o$ | GG | GD |
| mm | | | | | | kN | | - | kN | | - | kN | | kg | |
| 50 | 60 | 70 | 74 | 34 | 84 | 54,2 | 8,8 | 15 | 44,2 | 8,8 | 53 | 0,54 | 5,3 | 12 | 5,6 |
| | | | | | 84 | 67,9 | 10,9 | 20 | 52,5 | 10,9 | 66 | 0,68 | 6,4 | 14 | 6,4 |
| | | | | | 84 | 80,8 | 13 | 25 | 60,9 | 13 | 80 | 0,81 | 7,5 | 16 | 7,4 |
| | | | | | 109 | 48,5 | 8,8 | 13 | 44,2 | 8,8 | 53 | 0,54 | 5,3 | 14 | 6,5 |
| | | | | | 109 | 62,5 | 10,9 | 18 | 52,5 | 10,9 | 66 | 0,68 | 6,4 | 16 | 7,3 |
| | | | | | 109 | 73,1 | 13 | 22 | 60,9 | 13 | 80 | 0,81 | 7,5 | 18 | 8,1 |
| | | | | | 134 | 42,6 | 8,8 | 11 | 44,2 | 8,8 | 53 | 0,54 | 5.3 | 16 | 7,3 |
| | | | | | 134 | 54,2 | 10,9 | 15 | 52,5 | 10,9 | 66 | 0,68 | 6,4 | 18 | 8,2 |
| | | | | | 134 | 67,9 | 13 | 20 | 60,9 | 13 | 80 | 0,81 | 7,5 | 20 | 9 |
| | | | | | 159 | 48,5 | 10,9 | 13 | 52,2 | 10,9 | 66 | 0,68 | 6,4 | 20 | 9 |
| 62 | 78 | 98 | 116 | 34 | 118 | 155 | 53 | 20 | 82,2 | 53,3 | 66 | 1,3 | 12,5 | 33 | 15 |
| | | | | | 118 | 202 | 71 | 28 | 103 | 66 | 88 | 1,8 | 16 | 40 | 18 |
| | | | | | 118 | 252 | 88 | 37 | 123 | 83,3 | 111 | 2,2 | 21 | 47 | 21 |
| | | | | | 168 | 131 | 53 | 16 | 82,2 | 53,3 | 66 | 1,3 | 12,5 | 39 | 18 |
| | | | | | 168 | 180 | 71 | 24 | 103 | 66 | 88 | 1,8 | 16 | 46 | 21 |
| | | | | | 168 | 230 | 88 | 33 | 123 | 83,3 | 111 | 2,2 | 21 | 54 | 24 |
| | | | | | 218 | 105 | 53 | 12 | 82,2 | 53,3 | 66 | 1,3 | 12,5 | 45 | 21 |
| | | | | | 218 | 156 | 71 | 20 | 103 | 66 | 88 | 1,8 | 16 | 53 | 24 |
| | | | | | 218 | 202 | 88 | 28 | 123 | 83,3 | 111 | 2,2 | 21 | 60 | 27 |

3) Only for “thick” bottom: see order codes
4) Number of load-bearing rolling elements per side
5) GG = total mass of slide; GO = mass moved linearly with travelling top

www.lmotion.ru lmotion-mail@ya.ru Тел.: (495)-921-34-60

# RSAS - NSAS - PSAS Precision tables for motor drive, sealed B 200 - 300 (for product description, see page 33)

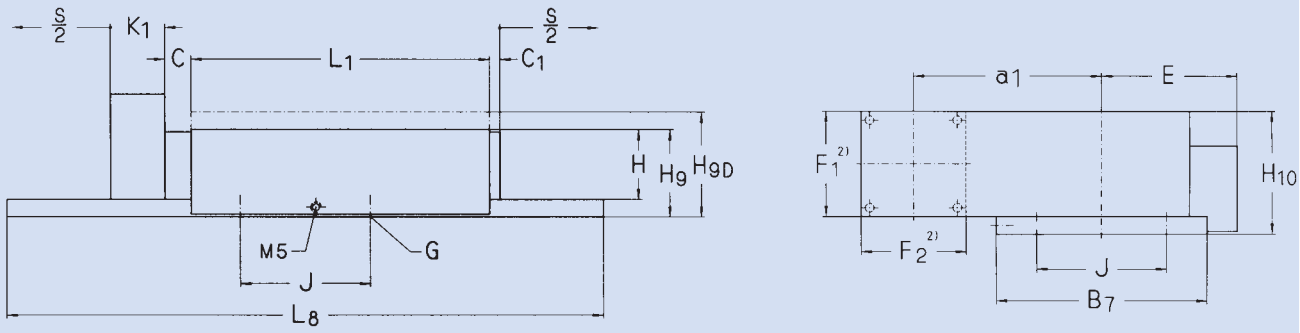


For detailed dimensions, see pages 36 and 38
For screw selection, see page 64

| Dimensions | | | | | | | | | | | | | |
|---|---|---|---|---|---|---|---|---|---|---|---|---|---|
| B | H | $L_1$ | $L_2$ | $L_8$ | Nominal stroke S[1] | $a_1$ | $B_7$ | C | $C_1$ | E | $F_1$ | $F_2$ | G |
| mm | | | | | | | | | | | | | |
| **200** | 60 | **410** | 310 | 600 | **100** | 184 | 220 | 20 | 8 | 132 | 85 | 60/85 | M8 |
| | | **510** | 410 | 700 | **100** | | | | | | | | |
| | | **610** | 510 | 800 | **100** | | | | | | | | |
| | | **510** | 310 | 800 | **200** | | | | | | | | |
| | | **610** | 410 | 900 | **200** | | | | | | | | |
| | | **710** | 510 | 1 000 | **200** | | | | | | | | |
| | | **610** | 310 | 1 000 | **300** | | | | | | | | |
| | | **710** | 410 | 1 100 | **300** | | | | | | | | |
| | | **810** | 510 | 1 200 | **300** | | | | | | | | |
| | | **810** | 410 | 1 300 | **400** | | | | | | | | |
| **300** | 75 | **515** | 415 | 710 | **100** | 241 | 320 | 22 | 10 | 182 | 111 | 85/110 | M10 |
| | | **615** | 515 | 810 | **100** | | | | | | | | |
| | | **515** | 315 | 810 | **200** | | | | | | | | |
| | | **615** | 415 | 910 | **200** | | | | | | | | |
| | | **715** | 515 | 1 010 | **200** | | | | | | | | |
| | | **615** | 315 | 1 010 | **300** | | | | | | | | |
| | | **715** | 415 | 1 110 | **300** | | | | | | | | |
| | | **815** | 515 | 1 210 | **300** | | | | | | | | |
| | | **815** | 415 | 1 310 | **400** | | | | | | | | |

1) Nominal stroke = max. stroke between the end stops. Effective stroke between the limit switches 5-20 mm shorter, depending on speed
For order designation: please see order codes, page 80 Example of order: NSAS 200.710.200.R1205

www.lmotion.ru lmotion-mail@ya.ru Тел.: (495)-921-34-60

# RSAS - NSAS - PSAS Precision tables for motor drive, sealed

Standard motor attachment
with toothed belt drive
i = 1:1
“Left-side” attachment type

Direct motor attachment also
possible for short strokes
with extended motor flange

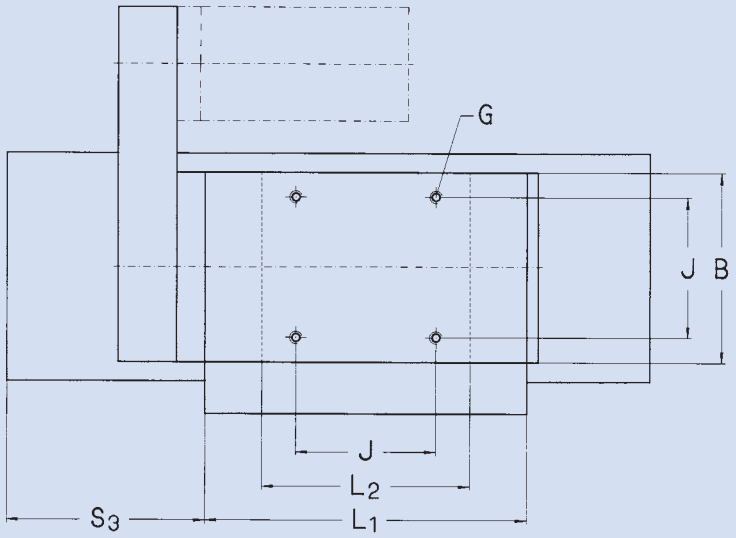


| Dimensions | | | | | | Load-carrying capacity | | | | | | | | Masses[5] | |
|---|---|---|---|---|---|---|---|---|---|---|---|---|---|---|---|
| | | | | | | RSAS | | | NSAS | | | PSAS | | | |
| $H_9$ | $H_{9D}$[3] | $H_{10}$ | J | $K_1$ | $S_3$ | $C_{eff}$ | $C_o$ | Z[4] | $C_{eff}$ | $C_o$ | C[4] | $C_{eff}$ | $C_o$ | GG | GD |
| mm | | | | | | kN | | - | kN | | - | kN | | kg | |
| 72 | 87 | 98 | 154 | 34 | 118 | 156 | 53 | 20 | 82,2 | 49,5 | 66 | 1,3 | 12,5 | 48 | 21 |
| | | | | | 118 | 202 | 71 | 28 | 103 | 66 | 88 | 1,8 | 16 | 59 | 25 |
| | | | | | 118 | 252 | 88 | 37 | 123 | 83,3 | 111 | 2,2 | 21 | 70 | 30 |
| | | | | | 168 | 131 | 53 | 16 | 82,2 | 49,5 | 66 | 1,3 | 12,5 | 57 | 26 |
| | | | | | 168 | 180 | 71 | 24 | 103 | 66 | 88 | 1,8 | 16 | 68 | 30 |
| | | | | | 168 | 230 | 88 | 33 | 123 | 83,3 | 111 | 2,2 | 21 | 79 | 34 |
| | | | | | 218 | 105 | 53 | 12 | 82,2 | 49,5 | 66 | 1,3 | 12,5 | 65 | 30 |
| | | | | | 218 | 156 | 71 | 20 | 103 | 66 | 88 | 1,8 | 16 | 76 | 34 |
| | | | | | 218 | 202 | 88 | 28 | 123 | 83,3 | 111 | 2,2 | 21 | 87 | 38 |
| | | | | | 268 | 131 | 53 | 16 | 103 | 66 | 88 | 1,8 | 16 | 85 | 39 |
| 91 | 111 | 128 | 245 | 42 | 124,5 | 58 | 58 | 19 | 173 | 106 | 72 | 2,7 | 24 | 112 | 50 |
| | | | | | 124,5 | 69 | 73 | 24 | 206 | 132 | 90 | 3,3 | 30 | 133 | 59 |
| | | | | | 174,5 | 35 | 31 | 10 | 138 | 79,2 | 54 | 2 | 18 | 108 | 50 |
| | | | | | 174,5 | 50 | 49 | 16 | 173 | 106 | 72 | 2,7 | 24 | 129 | 59 |
| | | | | | 174,5 | 62 | 64 | 21 | 206 | 132 | 90 | 3,3 | 30 | 149 | 67 |
| | | | | | 224,5 | 29 | 24 | 8 | 138 | 79,2 | 54 | 2 | 18 | 125 | 59 |
| | | | | | 224,5 | 43 | 40 | 13 | 173 | 106 | 72 | 2,7 | 24 | 145 | 67 |
| | | | | | 224,5 | 58 | 58 | 19 | 206 | 132 | 90 | 3,3 | 30 | 165 | 75 |
| | | | | | 274,5 | 35 | 31 | 10 | 173 | 106 | 72 | 2,7 | 24 | 161 | 75 |

3) Only for “thick” bottom: see order codes
4) Number of load-bearing rolling elements per side
5) GG = total mass of slide; GO = mass moved linearly with travelling top

www.lmotion.ru lmotion-mail@ya.ru Тел.: (495)-921-34-60

# Selection of screw for precision tables:

## RSS - NSS - PSS and RSAS - NSAS - PSAS B 100 - 400

Preloaded planetary roller screws are incorporated in these precision tables.

Accuracy class G5 ($v_{300p}$ = 23 µm)

| Dimensions | | | | Load-carrying capacity[1] | | Table driving torque | | | | |
|---|---|---|---|---|---|---|---|---|---|---|
| | | Screw Ø | Lead | Spindle | | Idling speed[2] | | | | Max. permiss. |
| B | | $d_o$ | p | $C_a$ | $C_{oa}$ | $M_{S1}$ | $M_{S2}$ | $M_{S3}$ | $M_{S4}$ | $M_a$ |
| mm | - | mm | | kN | | Nm | | N | | |
| 100 | R0801 | 8 | 1 | 3,1 | 3 | 0,08 | 0,1 | 0,09 | 0,1 | 0,4 |
| | R0802 | | 2 | 3,6 | 4,3 | 0,09 | 0,12 | 0,11 | 0,14 | 1,2 |
| | R0804 | | 4 | 4,4 | 4,4 | 0,11 | 0,17 | 0,14 | 0,21 | 1,5 |
| | R0805 | | 5 | 4,4 | 4,2 | 0,12 | 0,2 | 0,16 | 0,24 | 1,5 |
| 150 + 200 | R1202 | 12 | 2 | 3,7 | 4,6 | 0,21 | 0,26 | 0,23 | 0,28 | 1,2 |
| | R1204 | | 4 | 4,4 | 4,5 | 0,23 | 0,33 | 0,27 | 0,37 | 2,4 |
| | R1205 | | 5 | 4,8 | 4,7 | 0,24 | 0,36 | 0,3 | 0,41 | 3,1 |
| 300 | R1502 | 15 | 2 | 5,5 | 7,6 | 0,29 | 0,37 | 0,32 | 0,4 | 2 |
| | R1504 | | 4 | 6,6 | 7,4 | 0,31 | 0,47 | 0,37 | 0,53 | 3,9 |
| | R1505 | | 5 | 7,2 | 7,7 | 0,32 | 0,52 | 0,4 | 0,6 | 5,1 |
| 400 | R2002 | 20 | 2 | 10,9 | 21,8 | 0,42 | 0,54 | 0,46 | 0,58 | 5,8 |
| | R2004 | | 4 | 21,7 | 25 | 0,45 | 0,69 | 0,52 | 0,76 | 13 |
| | R2005 | | 5 | 27 | 26 | 0,46 | 0,76 | 0,55 | 0,85 | 17 |

1) With compressive load the screw should be checked for buckling

2) $M_S$ = max. required driving torque at the screw for the unloaded table:
$M_{s1}$ for RSS- NSS slides
$M_{s2}$ for PSS slides
$M_{s3}$ for RSAS - NSAS slides
$M_{s4}$ for PSAS slides

www.lmotion.ru lmotion-mail@ya.ru Тел.: (495)-921-34-60

# Screw speeds for precision tables: RSS - NSS - PSS and RSAS - NSAS - PSAS

Screw abutment dimensions for precision tables: RSS - NSS - PSS B 100 - 400

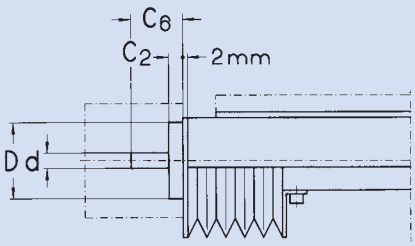


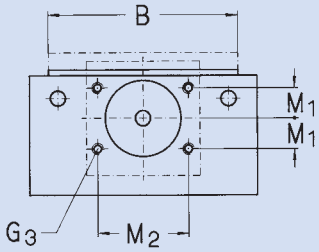


| Screw type | | | | Screw abutment dimensions | | | | | | |
|---|---|---|---|---|---|---|---|---|---|---|
| | Stroke S | Screw length[1] | Max. screw speed | $C_2$ | $C_6$ | d | D | $G_3$ | $M_1$ | $M_2$ |
| | mm | | min–1 | mm | | h7 | h7 | | | |
| R08 | 50 | 145 | 12 000 | 6 | 17 | 5 | 30 | 2xM5 | - | 45 |
| | 100 | 195 | 11 000 | | | | | | | |
| | 150 | 245 | 6 400 | | | | | | | |
| | 200 | 295 | 4 200 | | | | | | | |
| R12 | 100 | 220 | 8 500 | 9 | 28 | 10 | 47 | 4xM6 | 15 | 70 |
| | 200 | 320 | 6 000 | | | | | | | |
| | 300 | 420 | 3 200 | | | | | | | |
| | 400 | 520 | 2 000 | | | | | | | |
| R15 | 100 | 225 | 6 600 | 9 | 34 | 10 | 55 | 4xM6 | 15 | 70 |
| | 200 | 325 | 7 300 | | | | | | | |
| | 300 | 425 | 3 900 | | | | | | | |
| | 400 | 525 | 2 400 | | | | | | | |
| R20 | 100 | 445 | 4 700 | 12 | 34 | 12 | 68 | 4xM6 | 20 | 70 |
| | 200 | 445 | 4 700 | | | | | | | |
| | 300 | 445 | 4 600 | | | | | | | |
| | 400 | 545 | 2 900 | | | | | | | |
| | 500 | 645 | 2 000 | | | | | | | |

1) Total length of screw: for calculation of rotary moment of inertia, see page 17

www.lmotion.ru lmotion-mail@ya.ru Тел.: (495)-921-34-60


# ZB - Additional drill hole pattern: precision slides a. tables: top and bottom B 50 - 150 (for product description, see page 30)

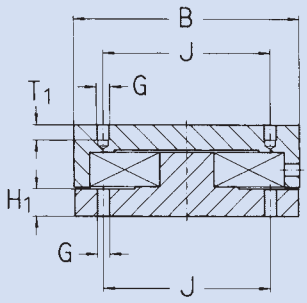


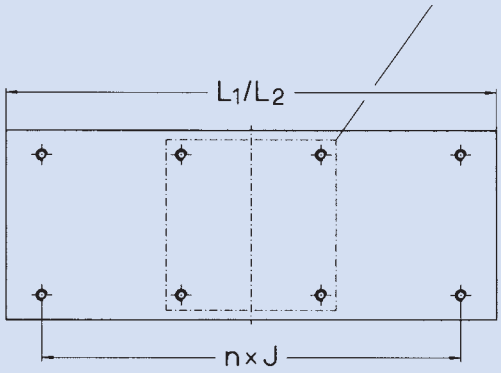


Drawing: ZB03

| Dimensions | | | | | | | | Number |
|---|---|---|---|---|---|---|---|---|
| B | Top length $L_1$ 1) | Base length $L_2$ 1) | G | $H_1$ | J | $T_1$ | $T_2$ | n 2) |
| mm | | | | | | | | - |
| **50** | 180 | - | M4 | 7,5 | 37 | 6 | 4,6 | 3 |
| **75** | 230 | - | M4 | 10,5 | 62 | 6 | 4,6 | 3 |
| **100** | 260 | 260 | M6 | 12 | 74 | 9 | 6,8 | 3 |
| | 310 | 310 | | | | | | 3 |
| | 360 | - | | | | | | 3 |
| | 410 | - | | | | | | 5 |
| | 460 | - | | | | | | 5 |
| **150** | 410 | 410 | M8 | 14 | 116 | 13 | 9 | 3 |
| | 510 | 510 | | | | | | 3 |
| | 610 | - | | | | | | 5 |
| | 710 | - | | | | | | 5 |
| | 810 | - | | | | | | 5 |

1) Additional drill hole pattern not available for the shorter lengths not shown here.
For order designation: please see order codes, page 80

2) "n" denotes max. poss. number of distances J of the particular top or bottom length. Four holes are standard in each top and bottom (1xJ). 3xJ accordingly denotes 8 holes.
Example of order: ZBU3

www.lmotion.ru lmotion-mail@ya.ru Тел.: (495)-921-34-60

# ZB - Additional drill hole pattern: precision slides a. tables: top and bottom B 200 - 400 (for product description, see page 30)

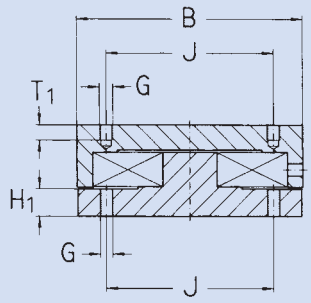


Standard drill hole pattern available

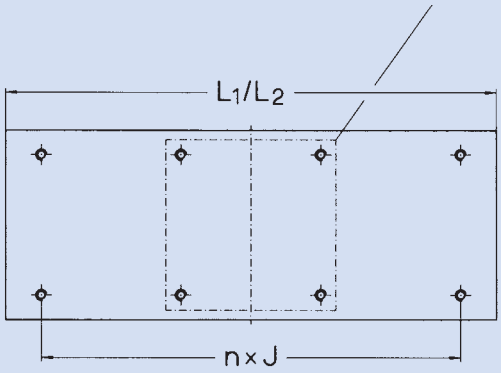


Drawing: ZB03

| Dimensions | | | | | | | | Number |
|---|---|---|---|---|---|---|---|---|
| B | Top length $L_1$ 1) | Base length $L_2$ 1) | G | $H_1$ | J | $T_1$ | $T_2$ | n 2) |
| mm | | | | | | | | - |
| 200 | 510 | 510 | M8 | 19,5 | 154 | 16 | 9 | 3 |
| | 610 | - | | | | | | 3 |
| | 710 | - | | | | | | 3 |
| | 810 | - | | | | | | 5 |
| | 910 | - | | | | | | 5 |
| 300 | 615 | - | M10 | 20 | 245 | 18 | 11 | 1/2J + 1J + 1/2J |
| | 715 | - | | | | | | 1/2J + 1J + 1/2J |
| | 815 | - | | | | | | 3 |
| | 915 | - | | | | | | 3 |
| 400 | 815 | - | M12 | 30 | 340 | 24 | 13 | 1/2J + 1J + 1/2J |
| | 1 015 | - | | | | | | 1/2J + 1J + 1/2J |

1) Additional drill hole pattern not available for the shorter lengths not shown here.
For order designation: please see order codes, page 80

2) "n" denotes max. poss. number of distances J of the particular top or bottom length. Four holes are standard in each top and bottom (1xJ). 3xJ accordingly denotes 8 holes.
Example of order: ZB05

# Locking device AR2 - Mounting bracket

**AR2 locking device for precision slides and tables**

The AR2 locking device is a friction device which is fitted to the side of a slide assembly. Friction resistance is produced by a knurled knob in the slide top through an auxiliary plate in the base. This avoids an additional load on the slide guidance system. An auxiliary deep-groove ball bearing between the knurled knob and the auxiliary plate prevents lateral movement by the slide as it is locked.

The AR2 locking device is available for the following slide and table types:

- precision slides with endplates RE . - NE - PE
- precision tables with manual operation RSM - NSM - PSM and RSK - NSK - PSK

With these types, the clamping device is located on the left-hand side of the slide. However, with the drive switched on, the clamping device is not strong enough to prevent travel of the slide along the spindle.

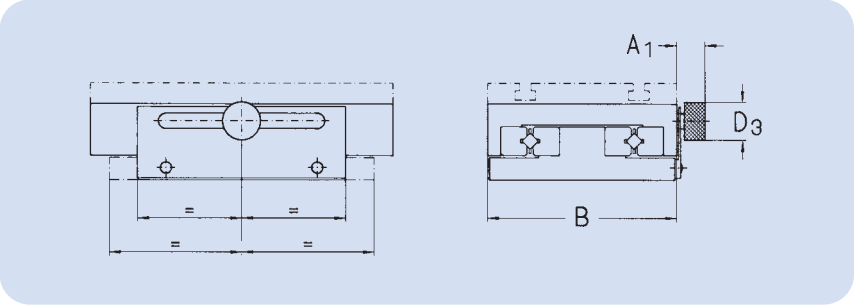


Dimensions

| B | $A_1$ | $D_3$ |
|---|---|---|
| mm | | |
| 50 | 13 | 15 |
| 75 | 15 | 20 |
| 100 | 15 | 20 |
| 150 | 19 | 30 |
| 200 | 19 | 30 |
| 300 | 25 | 35 |

**WG-WA mounting brackets**

Designs:

**WG** made from GG25 or blackened steel according to dimensions

WA made from light metal alloy. Surface protection on request at an extra charge.

For a precise definition of assembly of angle brackets for two or more axes, a drawing should be enclosed with the order.

Separate angle pieces do not have attachment holes provided.

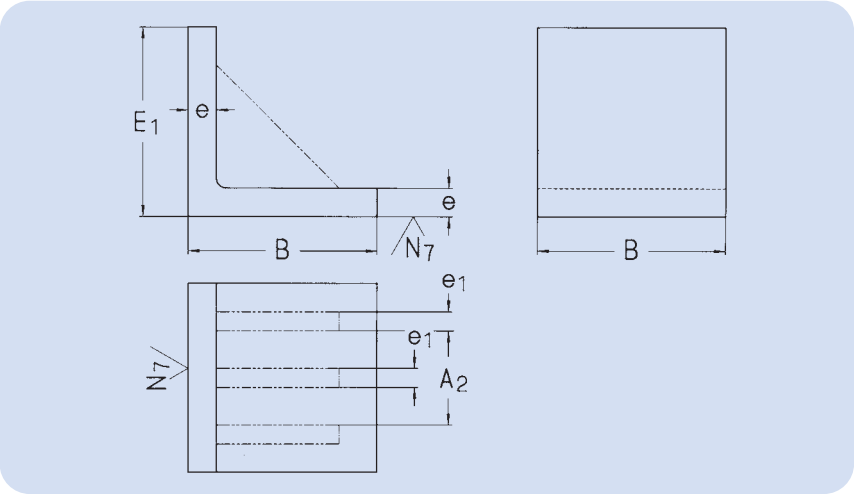


| Type | Dimensions | | | | |
|---|---|---|---|---|---|
| WG/WA | $A_2$ | B | $E_1$ | e | $e_1$ |
| mm | | | | | |
| 50 | - | 50 | 50 | 10 | 10 |
| 75 | - | 75 | 75 | 12 | 10 |
| 100 | - | 100 | 100 | 15 | 10 |
| 150 | 50 | 150 | 150 | 18 | 12 |
| 150 H | 50 | 150 | 250 | 18 | 12 |
| 200 | 90 | 200 | 200 | 20 | 12 |
| 200 H | 90 | 200 | 330 | 20 | 12 |
| 300 | 175 | 300 | 300 | 25 | 15 |
| 300 H | 175 | 300 | 520 | 25 | 15 |

For order designation: please see order codes, page 80.

www.lmotion.ru lmotion-mail@ya.ru Тел.: (495)-921-34-60

# Limit and reference switches

**Attachment of limit and reference switches for precision tables**
The slides of the series types RSS - NSS - PSS and RSAS - NSAS - PSAS can be equipped with integrated limit and reference switches.

**Limit switches**
Two limit switches are fitted under the right-hand plate cover of the tabletop on a rail, 5 mm from the mechanical dead ends. They can be adjusted by approximately 20 mm, and are activated by a control cam in the middle of the base.

Fig. 25

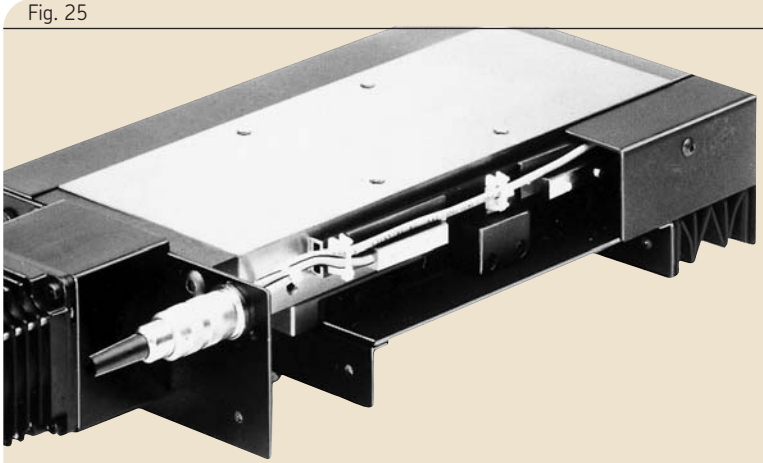

End-switch attachment with inductive switches type EEI 2

**Reference switch**
The reference switch is fitted under the same cover and on the same rail as the limit switch. It is 20 mm from the motorside limit switch and is adjustable by around ±20 mm.

**A selection is possible from among:**
- mechanical limit switches with 2 m free connection cable per switch
- mechanical limit switches, all wired into an 8-pin plug (IP64) on the motor side
- inductive limit or reference switches with 2 m free connection cable per switch
- inductive limit or reference switches all wired into an 8-pin plug (IP64) on the motor side.

| Technical data | Mechanical switch | Inductive switch |
|---|---|---|
| Switch accuracy (at const. speed and temperature) | ± 0,1 mm | ± 0,01 mm |
| Supply voltage | AC: bis 250 V DC: bis 125 V | 10 - 30 VDC |
| Max. switching current | AC: 500 mA DC: 400 mA | 200 mA |
| Normally closed (NC) or normally open (NO) | no restrictions | NC or NO |
| Output type | - | PNP or NPN |
| Protection type | IP67 | IP67 |
| Design | DIN 41635 design B | Special design ⊡ 8x40 |

**Warning:**
Unless otherwise indicated in the order, we use inductive switches as
- limit switch: PNP/NC
- reference switch: PNP/NO

For order designation: please see order codes, page 80.

www.lmotion.ru lmotion-mail@ya.ru Тел.: (495)-921-34-60

# Cross table assembly

**KN - KX - KU cross table assembly**
All slide and table types with the same width B are available readily mounted as cross tables in the central position, using the standard drill hold pattern.

Slides of different width B may also be assembled as cross tables on request, and subject to an examination of the design.

**Assembly type KX** (Fig. 28)
The long upper part of the lower X-axis is attached to the short base of the Y-axis above it.

**Assembly type KU** (Figs. 29 and 30)
The short base of the lower X-axis is fastened to the short base of the Y-axis above it.

**Right-hand assembly**
This means that, if the thick endplate or drive of the lower X-axis faces the observer, the thick endplate or drive of the upper Y-axis will be seen to the right.

**Left-hand assembly**
This means that, if the thick endplate or drive of the lower X-axis faces the observer, the thick endplate or drive of the upper Y-axis will be seen to the left.

**Travelling direction**
Unless otherwise indicated, the travelling direction is marked "+" for the motorised slides delivered, including controls, if the shorter slide part moves away from its drive. See Figs. 26-30.

Fig. 26

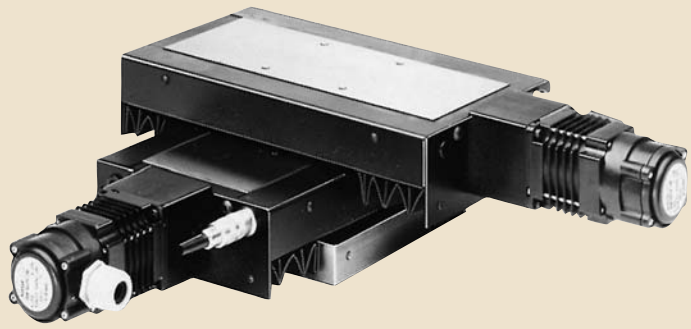

Assembly type KN + GP

Fig. 27

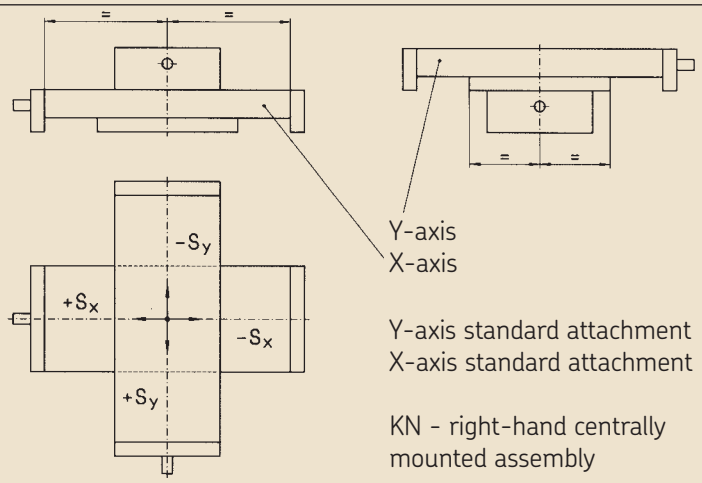


Y-axis standard attachment
X-axis standard attachment

KN - right-hand centrally mounted assembly

Fig. 28

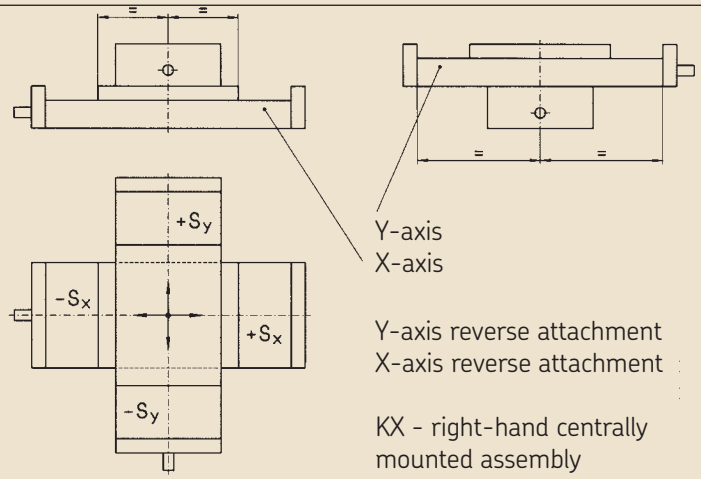


Y-axis reverse attachment
X-axis reverse attachment

KX - right-hand centrally mounted assembly

www.lmotion.ru lmotion-mail@ya.ru Тел.: (495)-921-34-60

**Warning**
The use of toothed belt drives with the slide series RSS - NSS - PSS for cross table assembly is possible only under certain conditions.

A prior examination must be carried out to ensure that the motors do not collide with each other.

If the order contains no other indications beyond KN, KX or KU we deliver a “right-hand centrally mounted” assembly. For left-hand mounting, please indicate KNL, KSL or KUL with the order.

The slides may also be mounted offcentre corresponding to the length $L_1$ or $L_2$ by means of the additional drill hole pattern with distances n x J. In that case, when ordering, please use “Figure 31” when entering dimensions X and Y.

Fig. 29

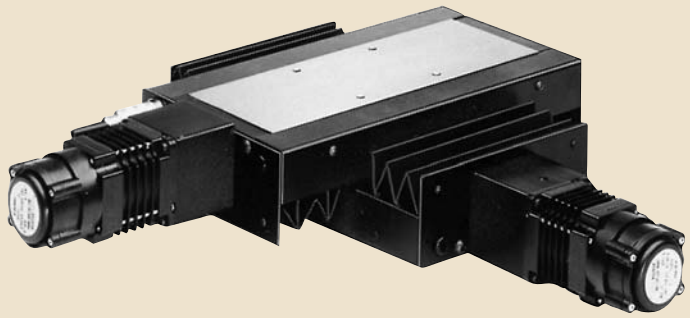

Assembly type KU

Fig. 30

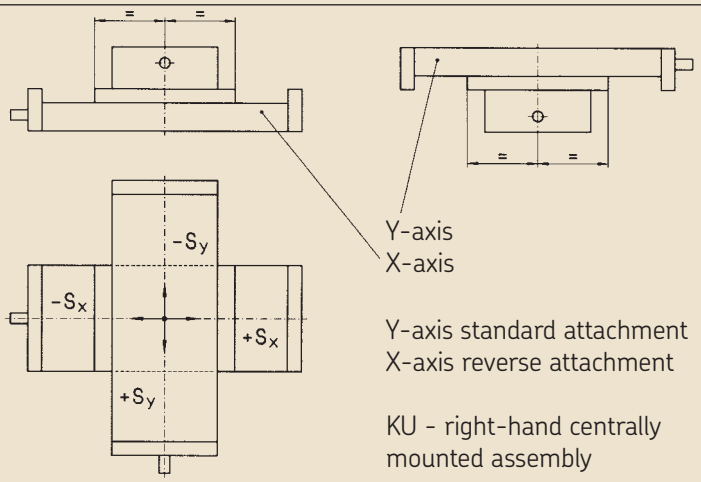


Fig. 31

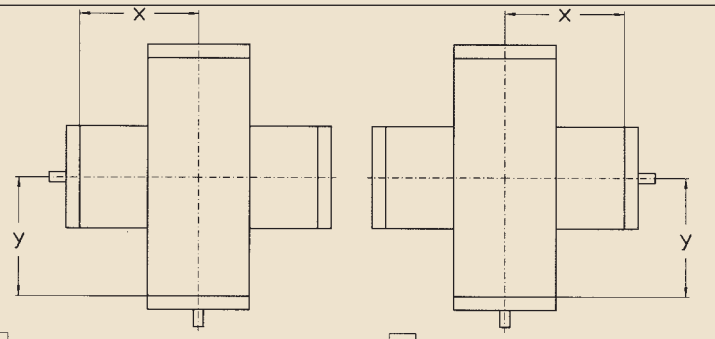


| | | | | | |
|---|---|---|---|---|---|
| ☐ | **KN** | **X =** _____ | ☐ | **KNL** | **X =** _____ |
| ☐ | **KU** | **Y =** _____ | ☐ | **KUL** | **Y =** _____ |
| ☐ | **KX** | | ☐ | **KXL** | |

For order designation: please see order codes, page 80.

# GP - Base plate for precision tables RSS - NSS - PSS B 100 - 400 (for product description, see page 32)

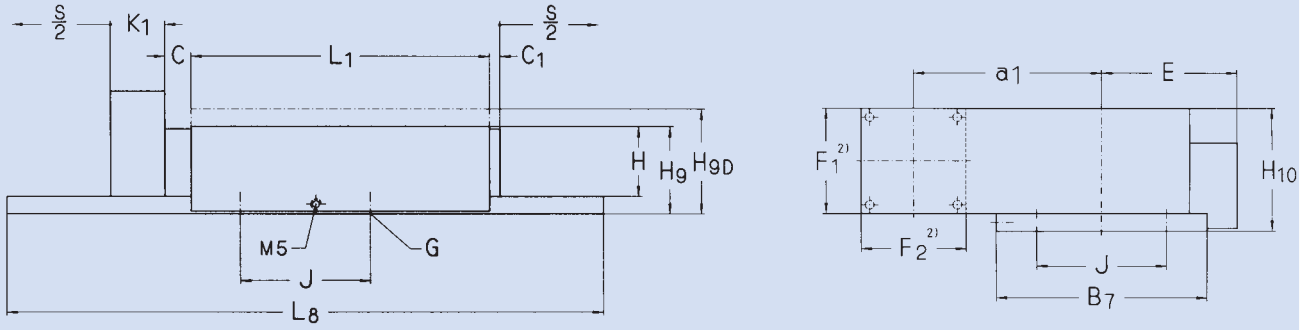


Dimensions

| B | H | $L_2$ | $B_6$ | G | $H_8$ | $H_{8D}$ 1) | J | $J_9$ | $L_7$ | N | $N_1$ |
|---|---|---|---|---|---|---|---|---|---|---|---|
| mm | | | | | | | | | | - | |
| **100** | 40 | **210**<br>**260**<br>**310** | 164 | M6 | 70 | 80 | 74 | 140 | 180<br>230<br>280 | 6.6 | 11 |
| **150** | 50 | **310**<br>**410**<br>**510** | 214 | M8 | 80 | 96 | 116 | 190 | 270<br>360<br>460 | 9 | 15 |
| **200** | 60 | **310**<br>**410**<br>**510** | 264 | M8 | 90 | 105 | 154 | 240 | 270<br>360<br>440 | 9 | 15 |
| **300** | 75 | **315**<br>**415**<br>**515** | 364 | M10 | 105 | 125 | 245 | 335 | 285<br>370<br>455 | 11 | 18 |
| **400** | 100 | **515**<br>**615** | 464 | M12 | 130 | 155 | 340 | 435 | 475<br>555 | 14 | 20 |

1) Only for "thick top"
For order designation: please order codes, page 82

Example for order: GP 200.310

www.lmotion.ru lmotion-mail@ya.ru Тел.: (495)-921-34-60

# DT slots

**D - Thick top for precision slides and tables**
All slides and tables shown in this catalogue can be supplied with a **thick top**.
Use of a thick top permits:

1. The fitting of standard T- or other slots and recesses according to the wishes of the customer.
2. With reverse attachment of a slide, the top is fastened on and remains stationary and does not have complete support. The thick top then serves to strengthen the base.
3. With cross table assembly KX, the thick top of the unsupported Y-axis serves to strengthen the base.

The height dimensions HD of the slides with thick top can be obtained from the corresponding dimensional Table for each slide.

For order designation for D thick slide top: please see order codes, page 80

**DT slots**
All slides with a thick top can be additionally equipped with standard T-slots as in the adjacent table. In this design the standard hole pattern of the slide top is not applicable. The dimensions of the T-slots are according to DIN 787.
This enables use of:

T - tenon blocks conforming to DIN 508 or
T - grooving screws conforming to DIN 787.

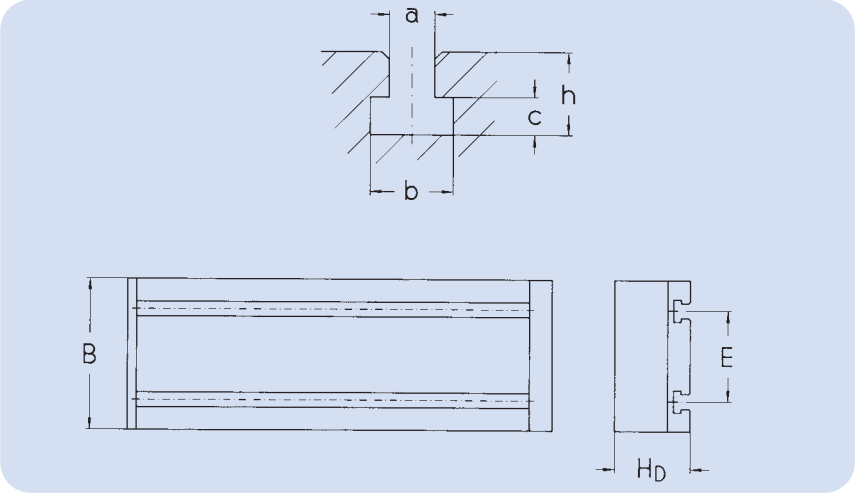


**Dimensions**

| Number of slots B | n | E | $H_D$ | a | b | c | h |
|---|---|---|---|---|---|---|---|
| mm | | | | H8 | | | |
| **50** | 1 | - | 35 | 6 | 11 | 5 | 11 |
| **75** | 1 | - | 44 | 6 | 11 | 5 | 11 |
| **100** | 2 | 60 | 50 | 6 | 11 | 5 | 11 |
| **150** | 2 | 90 | 66 | 8 | 15 | 7 | 15 |
| **200** | 2 | 120 | 75 | 8 | 15 | 7 | 15 |
| **300** | 3 | 2x100 | 95 | 10 | 17 | 8 | 17 |
| **400** | 3 | 2x150 | 125 | 14 | 24 | 9 | 23 |

For order designation for T-slots: please see order codes, page 80

# LMS - linear measurement system

**LMS linear measurement system for precision slides**

An incremental linear measurement system can be fitted to tables of series RSS - NSS - PSS and RSAS - NSAS - PSAS. The advantage of "direct" linear measurement over "indirect" rotary measurement through the lead screw and incremental shaft encoder attached to the motor may be described as follows. Direct linear measurement of a path avoids inaccuracies due to pitch error and thermal expansion of the screw, and elasticity and stiffness in the screw, nut and bearings.

Encapsulated systems of cross-sectional dimensions 46 x 18 can also be used. They can be connected to compressed air in order to create excess pressure in the measuring system, thereby preventing penetration by liquids and dust.

**Fig. 32:** shows attachment to the slide series RSS - NSS - PSS

**Fig. 33:** shows mounting in the sealed slide series RSAS - NSAS - PSAS

1) For dimensions, see pages 52-59

2) With dimensions 100 avoidance of overhang possible only by use of "thick" top.

3) For dimensions, see pages 60-63

4) For dimensions 300 and 400 the linear measurement system is mounted under the bellows cover.

Fig. 32

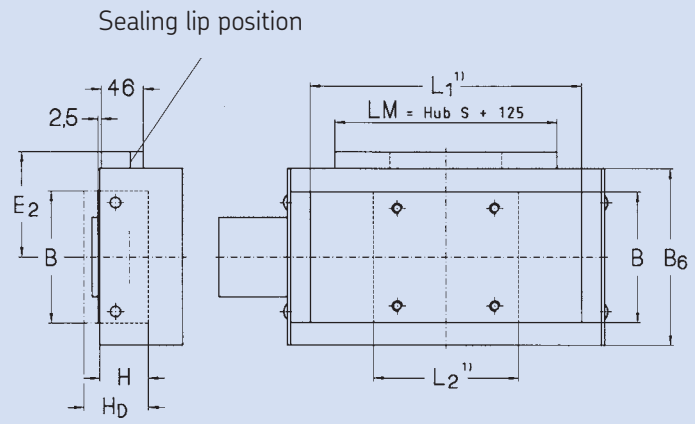


Dimensions

| B | B6 | H | $H_D$ | $E_2$ |
|---|---|---|---|---|
| mm | | | | |
| 100 | 164 | 40 2) | 50 | 98 |
| 150 | 214 | 50 | 66 | 123 |
| 200 | 264 | 60 | 75 | 148 |
| 300 | 364 | 75 | 95 | - 4) |
| 400 | 464 | 100 | 125 | - 4) |

Fig. 33

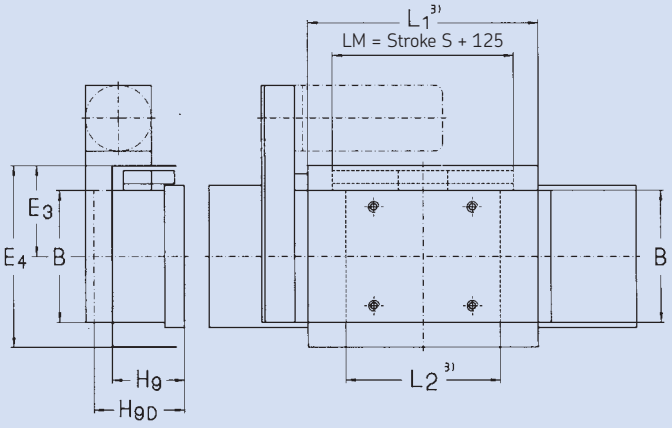


Dimensions

| B | $H_9$ | $H_{9D}$ | $E_3$ | $E_4$ |
|---|---|---|---|---|
| mm | | | | |
| 100 | 50 | 60 | 82 | 164 |
| 150 | 62 | 78 | 107 | 214 |
| 200 | 72 | 87 | 132 | 264 |
| 300 | 91 | 111 | 182 | 364 |

www.lmotion.ru lmotion-mail@ya.ru Тел.: (495)-921-34-60

# LMS - linear measurement system for precision slides

**Technical Data**
Grating pitch: 20 µm
Recommended measurement steps:
Use of an X-fold interpolation mounted either directly in the reading head or in a subordinate EXE gives the following measuring steps with 4-fold control assessment:

| Grating pitch | | 20 µm | |
|---|---|---|---|
| Interpolation<br>Measuring step | 1 x<br>5 µm | 5 x<br>1 µm | 10 x<br>0,5 µm |
| Output signal<br>Power supply | | square signals<br>+ 5 V max. 100 mA | |

**Accuracy classes**
Standard: ± 5 µm
On request: ± 3 µm

**Reference tags**
Standard in beginning and end area of nominal stroke, partly in middle position and “Abstandcodierung” possible

**Connection cable**
Standard: 3 m with 12-pin plug
On request: 0,3 m with mounting socket

For order designation: please see order codes, page 83

# Standard motor attachment for precision tables of series RSS - NSS - PSS B 100 - 200 motor flange

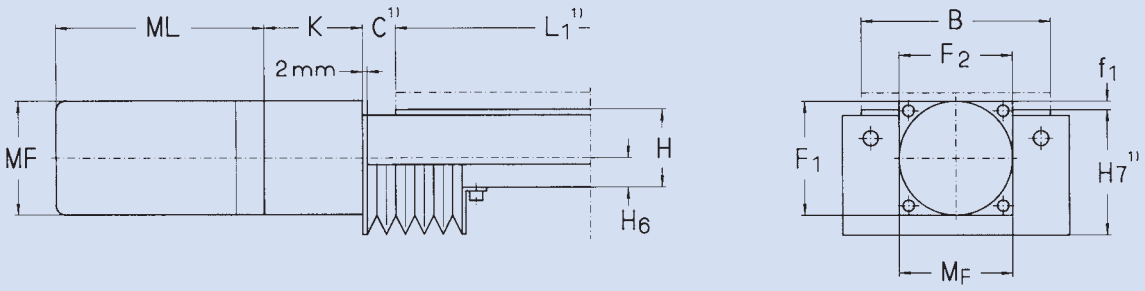


For product description, please see page 32

| Dimensions | | | | For motor[3)] | | | Motor flange | | | |
|---|---|---|---|---|---|---|---|---|---|---|
| B | H | $H_6$ | Type | Size | MF | Order No. | $F_1$ | $F_2$ | K | $f_1$ |
| mm | | | - | | mm | - | mm | | | |
| **100** | 40 | 15,5 | 5Ph | VDRM60 | 60 | **MF01BER1** | 60 | 60 | 50 | 5,5 |
| | | | DC | E 500 | Ø 57 | **MF01BAU1** | 60 | 60 | 55 | 5,5 |
| | | | AC | EBL2 | 55 | **MF01ENG1** | 55 | 60 | 54 | 5,5 |
| **150** | 50 | 24 | 5 Ph | VORDM60 | 60 | **MF03BER1** | 60 | 85 | 61 | 4 |
| | | | 5 Ph | VRDM90 | 86 | **MF03BER2** | 85 | 85 | 78 | 16,5 |
| | | | DC | E 500 | Ø 57 | **MF03BAU1** | 60 | 85 | 66 | 4 |
| | | | DC | E 600 | Ø 83 | **MF03BAU2** | 85 | 85 | 81 | 16,5 |
| | | | AC | EBL2 | 55 | **MF03ENG1** | 60 | 85 | 65 | 4 |
| **200** | 60 | 25 | 5 Ph | VRDM60 | 60 | **MF03BER1** | 60 | 85 | 61 | - |
| | | | 5 Ph | VRDM90 | 86 | **MF03BER2** | 85 | 85 | 78 | 7,5 |
| | | | DC | E 500 | Ø 57 | **MF03BAU1** | 60 | 85 | 66 | - |
| | | | DC | E 600 | Ø 83 | **MF03BAU2** | 85 | 85 | 81 | 7,5 |
| | | | AC | EBL2 | 55 | **MF03ENG1** | 60 | 85 | 65 | - |

1) For dimensions, see pages 52-59

www.lmotion.ru lmotion-mail@ya.ru Тел.: (495)-921-34-60

# Standard motor attachment for precision tables of series RSS - NSS - PSS B 100 - 200 toothed belt drive

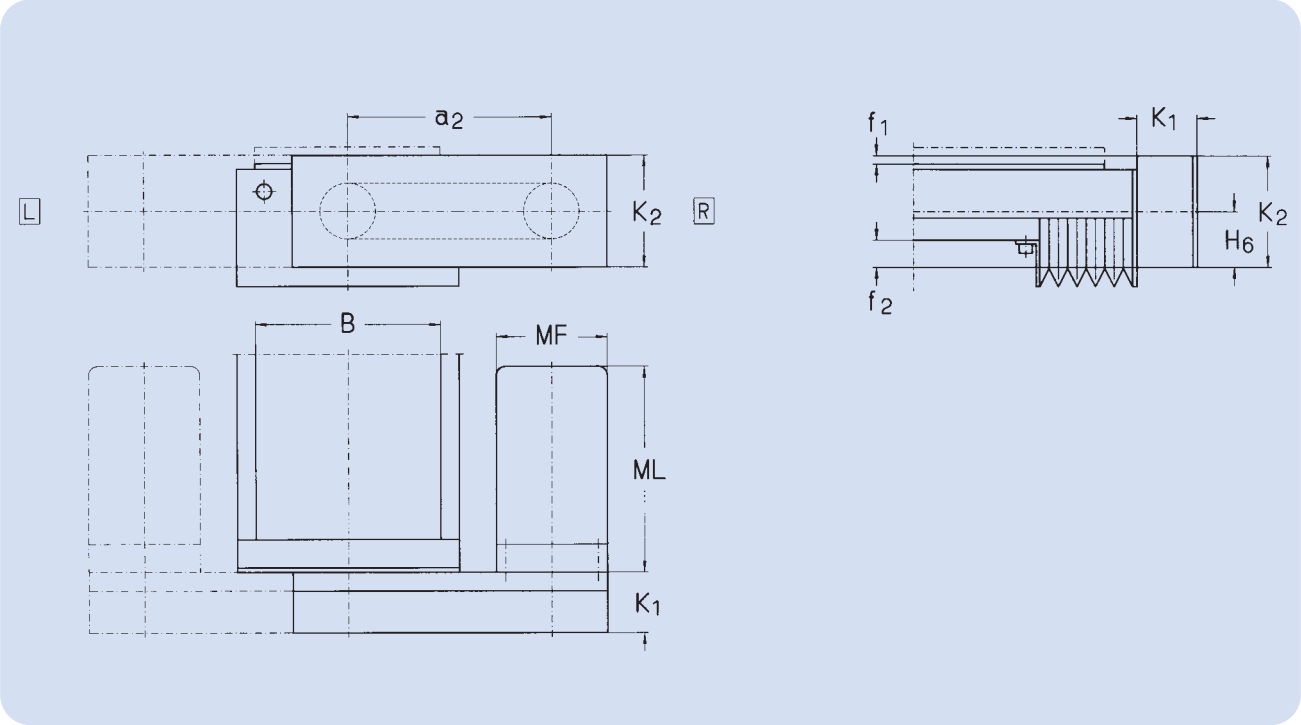


For product description, please see page 32

| Dimensions | For motor[3] | | | Toothed belt drive | | | | | |
|---|---|---|---|---|---|---|---|---|---|
| B | Type | Size | MF | Order No. | $K_1$ | $K_2$ | $a_2$ | $f_1$ | $f_2$ |
| mm | - | | mm | - | mm | | | | |
| 100 | 5 Ph | VDRM50 | 60 | ZR01BER1 | 34 | 60 | 120 | 5,5 | 14,5 |
| | DC | E 500 | Ø 57 | ZR01BAU1 | 34 | 60 | 120 | 5,5 | 14,5 |
| | AC | EBL2 | 55 | ZR01ENG1 | 34 | 60 | 120 | 5,5 | 14,5 |
| 150 | 5 Ph | VRDM60 | 60 | ZR03BER1 | 34 | 60 | 155 | 4 | 6 |
| | 5 Ph | VRDM90 | 86 | ZR03BER2 | 34 | 85 | 155 | 16,5 | 18,5 |
| | DC | E 500 | Ø 57 | ZR03BAU1 | 34 | 60 | 155 | 4 | 6 |
| | DC | E 600 | Ø 83 | ZR03BAU2 | 34 | 85 | 155 | 16,5 | 18,5 |
| | AC | EBL2 | 55 | ZR03ENG1 | 34 | 60 | 155 | 4 | 6 |
| 200 | 5 Ph | VRDM60 | 60 | ZR03BER1 | 34 | 60 | 172,5 | - | 5 |
| | 5 Ph | VRDM90 | 86 | ZR03BER2 | 34 | 85 | 182,5 | 7,5 | 17,5 |
| | DC | E 500 | Ø 57 | ZR03BAU1 | 34 | 60 | 172,5 | - | 5 |
| | DC | E 600 | Ø 83 | ZR03BAU2 | 34 | 85 | 182,5 | 7,5 | 17,5 |
| | AC | EBL2 | 55 | ZR03ENG1 | 34 | 60 | 172,5 | - | 5 |

1) For dimensions, see pages 52-59

# Standard motor attachment for precision tables of series RSS - NSS - PSS B 300 - 400 motor flange

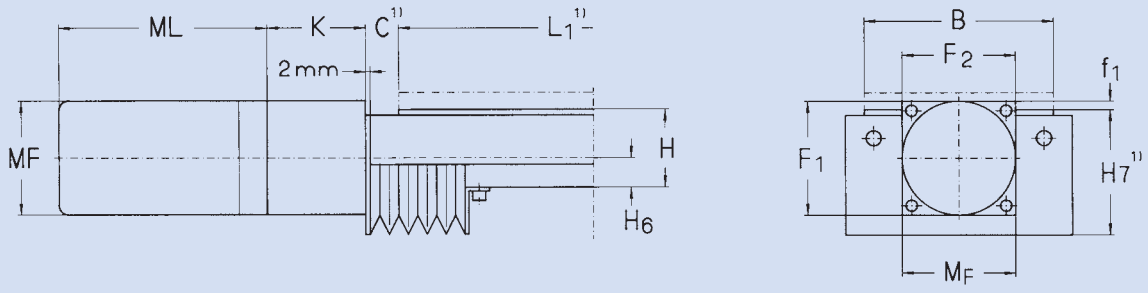


For product description, please see page 32

| Dimensions | | | | For motor[3)] | | | Motor flange | | | |
|---|---|---|---|---|---|---|---|---|---|---|
| B | H | $H_6$ | Type | Size | MF | Order No. | $F_1$ | $F_2$ | K | $f_1$ |
| mm | | | - | | mm | - | mm | | | |
| 300 | 75 | 28 | 5 Ph | VRDM60 | 60 | MF04BER1 | 60 | 85 | 68 | - |
| 300 | 75 | 28 | 5 Ph | VRDM90 | 86 | MF04BER2 | 85 | 85 | 85 | - |
| 300 | 75 | 28 | 5 Ph | RDM110 | 110 | MF04BER3 | 110 | 110 | 111 | 8 |
| 300 | 75 | 28 | DC | E 500 | Ø 57 | MF04BAU1 | 60 | 85 | 73 | - |
| 300 | 75 | 28 | DC | E 600 | Ø 83 | MF04BAU2 | 85 | 85 | 85 | - |
| 300 | 75 | 28 | DC | E 700 | Ø 102 | MF04BAU3 | 110 | 110 | 95 | 8 |
| 300 | 75 | 28 | AC | EBL2 | 55 | MF04ENG1 | 60 | 85 | 72 | - |
| 300 | 75 | 28 | AC | EBL3 | 92 | MF04ENG2 | 85 | 85 | 85 | - |
| 300 | 75 | 28 | AC | EBL4 | 105 | MF04ENG3 | 110 | 110 | 95 | 8 |
| 400 | 100 | 38 | 5 Ph | VRDM90 | 86 | MF05BER2 | 85 | 85 | 85 | - |
| 400 | 100 | 38 | 5 Ph | RDM110 | 110 | MF05BER3 | 110 | 110 | 111 | - |
| 400 | 100 | 38 | DC | E 600 | Ø 83 | MF05BAU2 | 85 | 85 | 85 | - |
| 400 | 100 | 38 | DC | E 700 | Ø 102 | MF05BAU3 | 110 | 110 | 110 | - |
| 400 | 100 | 38 | AC | EBL3 | 92 | MF05ENG2 | 85 | 85 | 85 | - |
| 400 | 100 | 38 | AC | EBL4 | 105 | MF05ENG3 | 110 | 110 | 95 | - |

1) For dimensions, see pages 52-59

www.lmotion.ru lmotion-mail@ya.ru Тел.: (495)-921-34-60

# Standard motor attachment for precision tables of series RSS - NSS - PSS B 300 - 400 toothed belt drive

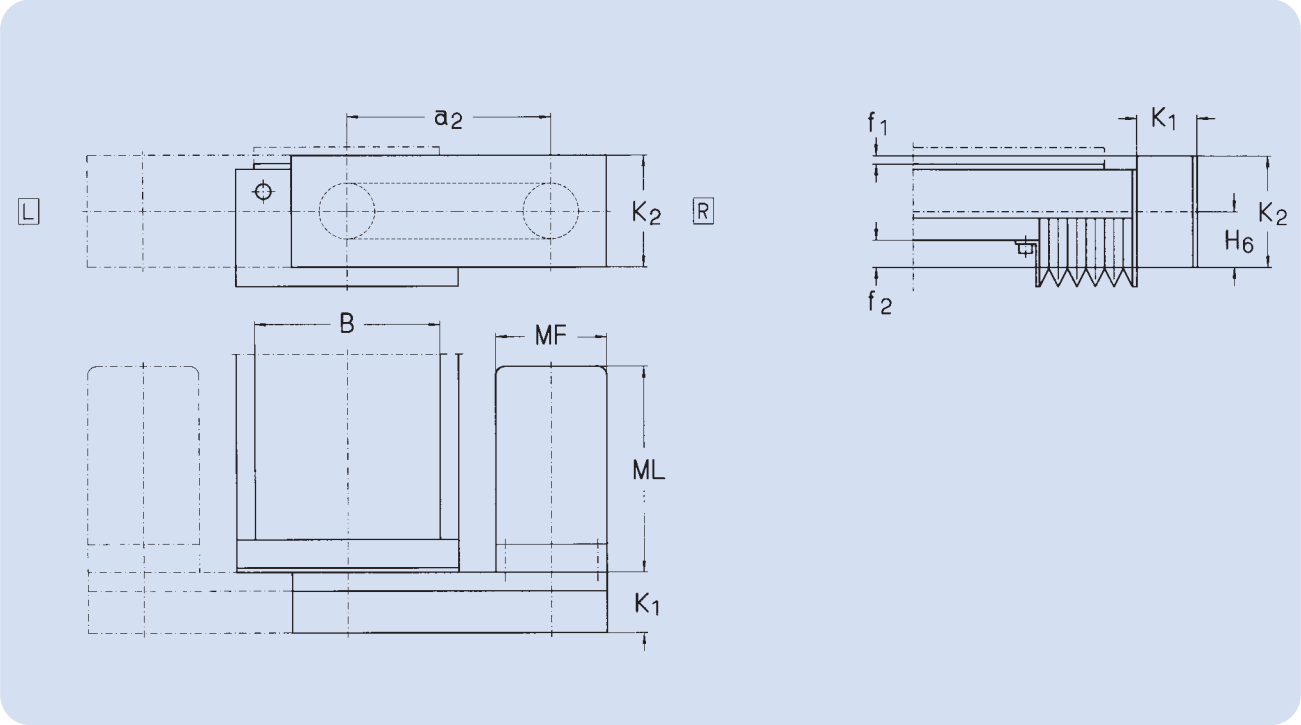


For product description, please see page 32

| Dimensions | For motor[3)] | | | Toothed belt drive | | | | | |
|---|---|---|---|---|---|---|---|---|---|
| B | Type | Size | MF | Order No. | $K_1$ | $K_2$ | $a_2$ | $f_1$ | $f_2$ |
| mm | - | | mm | - | mm | | | | |
| 300 | 5 Ph | VRDM60 | 60 | ZR04BER1 | 40 | 60 | 217,5 | - | 2 |
| 300 | 5 Ph | VRDM90 | 86 | ZR04BER2 | 40 | 85 | 235 | - | 14 |
| 300 | 5 Ph | RDM110 | 110 | ZR04BER3 | 40 | 110 | 250 | 8 | 27 |
| 300 | DC | E 500 | Ø 57 | ZR04BAU1 | 40 | 60 | 217,5 | - | 2 |
| 300 | DC | E 600 | Ø 83 | ZR04BAU2 | 40 | 85 | 235 | - | 14 |
| 300 | DC | E 700 | Ø 102 | ZR04BAU3 | 40 | 110 | 250 | 8 | 27 |
| 300 | AC | EBL2 | 55 | ZR04ENG1 | 40 | 60 | 217,5 | - | 2 |
| 300 | AC | EBL3 | 92 | ZR04ENG2 | 40 | 85 | 235 | - | 14 |
| 300 | AC | EBL4 | 105 | ZR04ENG3 | 40 | 110 | 250 | 8 | 27 |
| 400 | 5 Ph | VRDM90 | 86 | ZR05BER2 | 40 | 85 | 280 | - | 4,5 |
| 400 | 5 Ph | RDM110 | 110 | ZR05BER3 | 40 | 110 | 295 | - | 17 |
| 400 | DC | E 600 | Ø 83 | ZR05BAU2 | 40 | 85 | 280 | - | 4,5 |
| 400 | DC | E 700 | Ø 102 | ZR05BAU3 | 40 | 110 | 295 | - | 17 |
| 400 | AC | EBL3 | 92 | ZR05ENG2 | 40 | 85 | 280 | - | 4,5 |
| 400 | AC | EBL4 | 105 | ZR05ENG3 | 40 | 110 | 295 | - | 17 |

1) For dimensions, see pages 52-59

www.lmotion.ru lmotion-mail@ya.ru Тел.: (495)-921-34-60


# Order codes

The order codes show the complete designation system for SKF slides, tables and accessories.

Used consistently, this designation system will correctly identify every possible slide or table variant. We therefore ask that the codes be used consistently.

Please take into account that only the type variants and dimension combinations shown in the Tables are possible.

For the designation of a slide or table system to be complete, it must have the proper type designation.

Please see type codes and, if accessories are involved, the order codes for accessories.

Type codes

| 1 | 2 | 3 | • | 4 | • | 5 | • | 6 | • | 7 | 8 | 9 |
|---|---|---|---|---|---|---|---|---|---|---|---|---|

| | | | Table page |
|---|---|---|---|
| 1 | N | - Precision slides with rail guide system, needle rollers | 34 - 39 |
| | P | - Precision slides with rail guide system, dry sliding liners | 34 - 39 |
| | R | - Precision slides with rail guide system, crossed rollers | 34 - 39 |
| | S | - Dovetail slides | 22 - 23 |
| 2 | E | - With endplates, only for precision slides | 40 - 43 |
| | SAS | - For motor drive, sealed, only for precision tables | 60 - 63 |
| | SK | - For manual operation, with hand crank: dovetail and precision tables | 24 - 26 / 44 - 51 |
| | SM | - For manual operation, with micrometer knurl: dovetail and compact cross tables | 24 - 26 / 44 - 51 |
| | SS | - For motor drive: precision tables and compact cross tables | 52 - 59 / 84 - 85 |

3 Table width B

4 Length of top $L_1$ - Dovetail and precision slides

5 Nominal stroke S

6 Designation suffix if desired:
A - Slides or tables made of aluminium, black anodized
D - Slides with thick top: only for precision slides
DT - Slides with thick top and T-slots: dovetail and precision slides

7 Only for slides or tables for motor drive
R - Preloaded planetary roller screw: - For precision slides, see 64 - 65

8 Screw diameter

9 Screw lead

www.lmotion.ru lmotion-mail@ya.ru Тел.: (495)-921-34-60

# Order codes for accessories

## ZB - Additional drill hole pattern: dovetail and precision slides

| ZB | 1 | 2 |
|---|---|---|

| | | | | Table page |
|---|---|---|---|---|
| 1 | 0 | - Additional drilling hole pattern in top | - For dovetail slides, see | 28 - 29 |
| | U | - Additional drilling hole pattern in bottom | - For precision slides, see | 66 - 67 |
| 2 | Number of distances n x J | | | |

## DU - Viewing hole for compact cross tables

| DU | 1 |
|---|---|

| | | | |
|---|---|---|---|
| 1 | Ø $D_1$ - Desired diameter of viewing hole<br>for max. possible Ø $D_1$, see table | | 72 |

## AR - Locking device

| AR | 1 | 2 |
|---|---|---|

| | | | |
|---|---|---|---|
| 1 | 1 | - Locking device for dovetail slides | 27 |
| | 2 | - Locking device for precision slides | 70 |
| 2 | Slide width B | | |

## WG - WA - Mounting bracket

| W | 1 | 2 |
|---|---|---|

| | | | |
|---|---|---|---|
| 1 | G | - Mounting bracket of material GG25 | |
| | A | - Mounting bracket of light metal alloy | 27 / 68 |
| 2 | Type of mounting bracket | | |

www.lmotion.ru lmotion-mail@ya.ru Тел.: (495)-921-34-60

# Order codes for accessories

## Limit and reference switches for precision and compact cross tables

| E | 1 | 2 | 3 | 4[1] | / | 5[1] |
|---|---|---|---|---|---|---|

Table page

| | | | |
|---|---|---|---|
| 1 | E | - Limit switch | - For precision slides, see 69 |
| | R | - Reference switch | |
| 2 | M | - Mechanical switch | |
| | I | - Inductive switch | |
| 3 | 1 | - Switch with 2 m-long connection cable | |
| | 2 | - Switch with 8-pin plug cabled on motor side | |
| 4 | PNP[2] | - Output type | |
| | NPN[2] | - Output type | |
| 5 | NC[2] | - Normally closed | |
| | NO[2] | - Normally open | |

1) Indication only for inductive switches
2) In the absence of indications, we deliver the inductive switches as limit switch PNT/NC and reference switch PNP/NO

## KN - KU - KX cross table assembly for precision slides

| K | 1 | 2 |
|---|---|---|

| | | | |
|---|---|---|---|
| 1 | N | - Assembly type: for definition, see page 70 | 70 - 71 |
| | U | - Assembly type: for definition, see page 70 | |
| | X | - Assembly type: for definition, see page 70 | |
| 2 | - | - Standard mounting direction “on the right” | |
| | L | - Mounting direction “on the left” | |

## GP - Base plate for precision slides

| GP | 1 | • | 2 |
|---|---|---|---|

| | | |
|---|---|---|
| 1 | Slide width B | 71 |
| 2 | Length of bottom $L_2$ | |

www.lmotion.ru lmotion-mail@ya.ru Тел.: (495)-921-34-60

# Order codes for accessories

MF - Motor flange for precision slides and compact cross tables

Table page

| Order No. |
|---|

- For precision slides, see 76 / 78

ZR - Toothed belt drive for precision slides

| Order No. | • | 1 |
|---|---|---|

| | | |
|---|---|---|
| 1 | Attachment direction | |
| | R | - on the right-hand side (standard) |
| | L | - on the left-hand side |

LMS - Linear measurement system for precision slides and compact cross tables

| LMS | 1 | / | 2 | / | 3 |
|---|---|---|---|---|---|

- For precision slides, see 74 - 75

| | | |
|---|---|---|
| 1 | 20 | - Grating pitch 20 µm |
| 2 | 5 µm | - Accuracy class ±5 µm (standard) |
| | 3 µm | - Accuracy class ±3 µm |
| 3 | - | - Sine signal: output |
| | 1x | - Square wave signal: output |
| | 5x | - Square wave signal: output with five-fold interpolation |
| | 10x | - Square wave signal: output with ten-fold interpolation |

| 1 | - | 2 | - | 3 | 4 |
|---|---|---|---|---|---|

| | | |
|---|---|---|
| 1 | Motor type | |
| | Options: | |
| 2 | B | - With attached holding brake |
| 3 | MS | - DC motor with attached hollow shaft encoder |
| 4 | Encoder gratings: 500 / 1 000 / 1 250 / 2 500 | |

www.lmotion.ru lmotion-mail@ya.ru Тел.: (495)-921-34-60

# Examples

ExamplesExample of order no. 1:

RSS 200.810.300.A.R1205
ZB05
ZBU3
EE12 PNP/NO
ER12 NPN/NC
MF03 BAU2
E 642 - MS 500

bdenotes: cross roller guided precision table for motor drive
width: B = 200 mm
top length $L_1$ = 810
nominal stroke S = 300
bottom length $L_2$ = 510
aluminium construction
preloaded planetary roller screw with 12 mm diameter and 5 mm lead

with:
- Additional drill hole pattern in top 5 x J
- Additional drill hole pattern in bottom 3 x J
- 2 inductive limit switches wired to 8-pin plug, with NPN connection type as opener
- 1 inductive reference switch wired to 8-pin plug, with NPN connection type as opener
- Motor flange and clutch for DC motor of design dimension E600
- Permanent magnet DC servo-motor with integral tachogenerator.
  Nominal torque 0,72 Nm at 500 rpm

Example of order no. 2

TSS 160.100.R0802
2 x EEM1
2 x LMS 20 / 5 µm / 5x
2 x MF01 BER 1

denotes: Width: B = 160 x 160
Nominal stroke S = 100 x 100
Preloaded roller screw drive with diameter of 8 mm and lead of 2 mm

with:
- 4 mechanical limit switches, each with 2 m of free cable
- 2 linear measurement systems:
  grating pitch 20 µm; accuracy class ±5 µm;
  square-wave signal output with five-fold interpolation
- 2 motor flanges with coupling for 5-phase motor of design dimensions VRDM 60

www.lmotion.ru lmotion-mail@ya.ru Тел.: (495)-921-34-60


# Performance specification for selection of

☐ Slides
☐ Table systems

1. Customer / Query no.: .....
2. Application: .....
3. Type of slide or table desired:
   - ☐ Ball bearing slide
   - ☐ Dove tail slide
   - ☐ Precision unit with crossed roller guide
   - ☐ Precision unit with needle roller guides
   - ☐ Precision unit with dry sliding liner guides
   - ☐ Profile table
   - ☐ Standard table

| | | | X | Y | Z | |
|---|---|---|---|---|---|---|
| 4. | Number of axes in system: | | | | | |
| 5. | Effective stroke $S_1$: (Max. required stroke between the endplates with motor drive) | [mm] or [°] | | | | |
| 6. | Load: (for offcentre load applications, please enclose drawing | dynamic [N] | | | | |
| | | static [N] | | | | |
| | Load direction: | [± X, ± Y, ± Z] | | | | |
| 7. | Added load mass: (or slide masses) | [kg] | | | | |
| 8. | Speed: | min/max: [m/min] | / | / | / | / |
| 9. | Acceleration: | max: [m/s²)] | | | | |
| 10. | Required life | [Number] double strokes/stroke | / | / | / | / |
| 11. | Accuracies (Definition see page 12-15) | Straightness T [µm/S] | | | | |
| | | Rotation R [mrad/S] | | | | |
| | | Perpendicularity W [mrad] | | | | |
| | Positioning accuracy: | Positioning tolerance [µm] | | | | |
| | | Positioning variation Ps [µm] | | | | |
| | | Smallest measuring step [µm] | | | | |

12. Dirt fallout ☐ none ☐ minor ☐ medium which type .....
13. Material: ☐ grey cast iron ☐ aluminium ☐ steel
14. Standard accessories .....
15. With motor: ☐ 5-phase stepping motor ☐ DC motor ☐ AC motor
16. Motors including power controls: .....
17. Including CNC controls: ☐ Linear path control ☐ continuous path control ☐ continuous path control with circuit interpolation

Made up by / date:

www.lmotion.ru lmotion-mail@ya.ru Тел.: (495)-921-34-60

# Notes

www.lmotion.ru lmotion-mail@ya.ru Тел.: (495)-921-34-60

www.lmotion.ru lmotion-mail@ya.ru Тел.: (495)-921-34-60



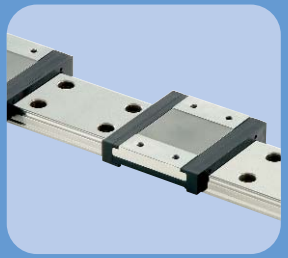

# Contacts

## Linear motion from SKF
## www.linearmotion.skf.com


**Benelux**
**SKF Multitec Benelux B.V.**
Nederland
Tel +31 030 6029 029
Fax +31 030 6029 028

België & Luxembourg
Tel +32 25 024 270
Fax +32 25 027 336
E-mail multitec_benelux@skf.com

**Brasil**
**SKF do Brasil Ltda**
Tel +55 11 461 991 114
Fax +55 11 461 991 99
E-mail marketing.skf@skf.com.br

**Canada**
**SKF Canada Limited**
Tel +1 416 299 1220
Fax +1 416 299 6548
E-mail www.marketing@skf.ca

**Danmark**
**SKF Multitec**
Tel +45 65 92 77 77
Fax +45 65 92 74 77
E-mail customerservice.multitec@skf.com

**Deutschland & Österreich**
**SKF Linearsysteme GmbH**
Tel +49 9721 657 232/233
Fax +49 9721 657 111
E-mail lin.sales@skf.com

**España & Portugal**
**SKF Productos Industriales S.A.**
Tel +34 93 377 99 07/-77
Fax +34 93 474 2039/-2156
E-mail prod.ind@skf.com

**France**
**SKF Equipements**
Tel +33 1 30 12 73 00
Fax +33 1 30 12 69 09
E-mail equipements.france@skf.com

**Italia**
**SKF Multitec S.p.A.**
Tel +39 011 22 49 01
Fax +39 011 22 49 233
E-mail multitec.italy@skf.com

**Mexico**
**SKF de México S.A. de C.V**
Tel +52 222 229 4900
Fax +52 222 229 4908
Web www.skf.com.mx

**Norge**
**SKF Multitec**
Tel +47 22 90 50 00
Fax +47 22 30 28 14
E-mail customerservice.multitec@skf.com

**Schweiz**
**SKF LM&PT**
Tel +41 44 825 81 81
Fax +41 44 825 82 82
E-mail skf.schweiz@skf.com

**Suomi**
**SKF Multitec**
Tel +358 9 615 00 850
Fax +358 9 615 00 851
E-mail multitec.nordic@skf.com

**Sverige**
**SKF Multitec**
Tel +46 42 253 500
Fax +46 42 253 545
E-mail customerservice.multitec@skf.com

**U.K.**
**SKF (UK) Ltd.**
Tel +44 1582 496 735
Fax +44 1582 496 574
E-mail a&mc.uk@skf.com

**USA**
**SKF Motion Technologies**
Tel +1 610 861 4800
Toll free +1 800 541 3624
Fax +1 610 861 4811
E-mail motiontech.usa@skf.com

**Other countries**
Fax +49 972 657 118
E-mail guidings@skf.com


Represented by:

SKF is a registered trademark of the SKF Group.

© SKF 2006
The contents of this publication are the copyright of the publisher and may not be reproduced (even extracts) unless prior written permission is granted. Every care has been taken to ensure the accuracy of the information contained in this publication but no liability can be accepted for any loss or damage whether direct, indirect or consequential arising out of the use of the information contained herein.

Publication 4211EN - 0601A Printed in Sweden