Telescopic pillar

Telemag TFG

Benefits

- Push or pull load
- Compact design
- Fast movement
- Powerful
- Plug and play

Standards

- EN/IEC 60601–1
- UL 60601–1

www.lmotion.ru lmotion-mail@ya.ru Тел.: (495)-921-34-60

Suitable control units and accessories

Control units

	SCU 1	SCU 5	SCU 9	VCU 5	VCU 8	VCU 9	BCU 5	BCU 8	LD 014	LD 015	EHA3	STJ	STE
TFG 10	●	●	●	●	●	●	●	●	●	●			
TFG 50	Integrated control unit										●	●	●
TFG 90	Integrated control unit										●	●	●
EHA3	●	●	●	●	●	●	●	●					
STJ	●	●	●	●	●	●	●	●					
STE	●	●	●	●	●	●	●	●					
LD-034.000.004									●	●			
LD-011.031.000									●	●			

Hand switch
Foot switch
Desk switch

Connecting diagrams

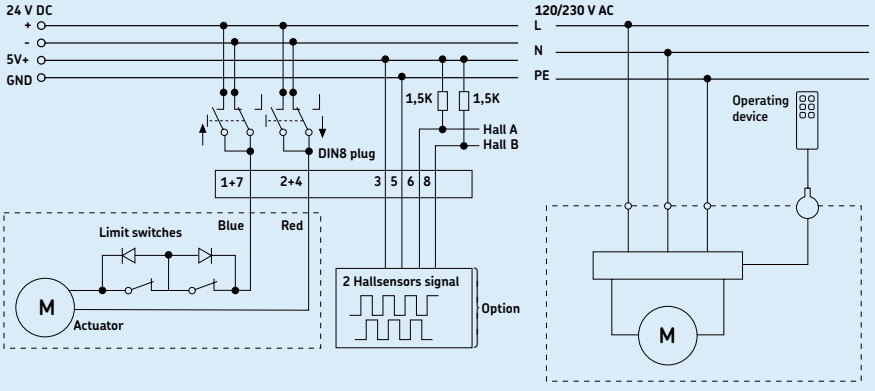

Dimensional drawing

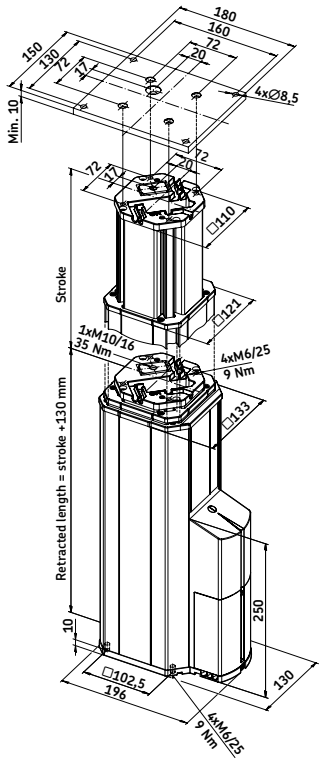

Note: mounting plates are not included.
To be ordered separately.

Legend:
S = stroke
L = retracted length

Technical data

	Unit	TFG 10	TFG 50	TFG 90
Rated push load	N	2 500	2 500	2 500
Rated pull load	N	2 500	2 500	2 500
Bending load	Nm	up to 500*	up to 500*	up to 500*
Speed (full load to no load)	mm/s	15 to 19	15 to 19	15 to 19
Telescopic pillar version	# of section	3-section	3-section	3-section
Stroke	mm	200 to 700	200 to 700	200 to 700
Retracted length	mm	S+130	S+130	S+130
Voltage	V AC	24	120	230
Power	W	120	160	160
Current	A	5	1,8	1
Duty cycle: intermittent operation	min.	1 min./9 min.	1 min./9 min.	1 min./9 min.
Duty cycle: short-time operation	min.	3	3	3
Ambient temperature	°C	+10 to +40	+10 to +40	+10 to +40
Type of protection	IP	30	30	30
Protection class	–	SELV	1	1
Type of control	–	electrical	electrical	electrical
Weight	kg	8 to 19	8 to 19	8 to 19

* For details, please see bending load diagrams

www.lmotion.ru lmotion-mail@ya.ru Тел.: (495)-921-34-60

Performance diagrams

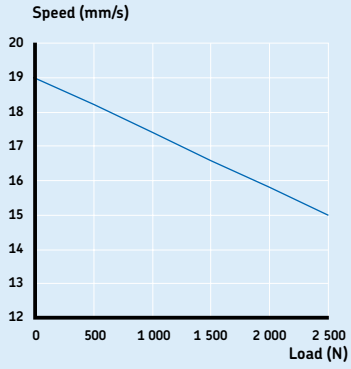

Speed-load diagram

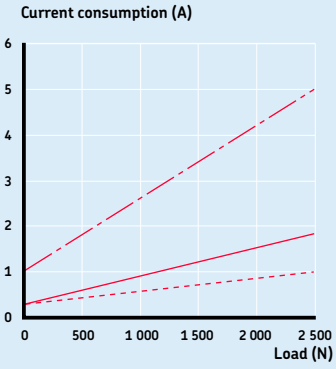

Current-load diagram

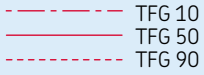

Bending load diagrams

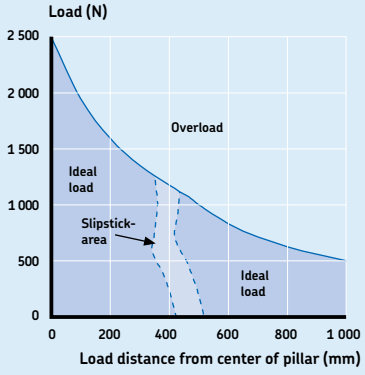

200 mm stroke

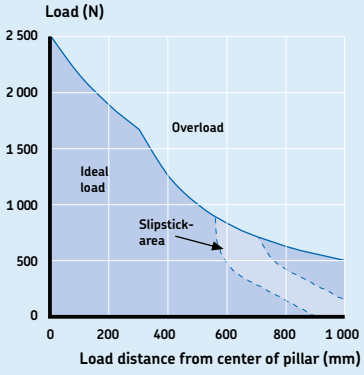

300 mm stroke

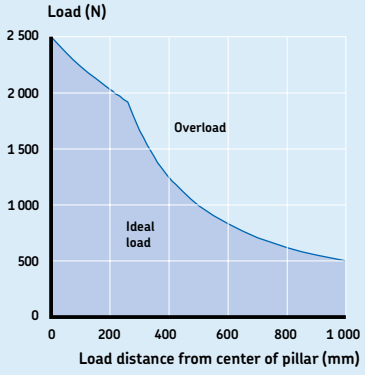

400 mm stroke

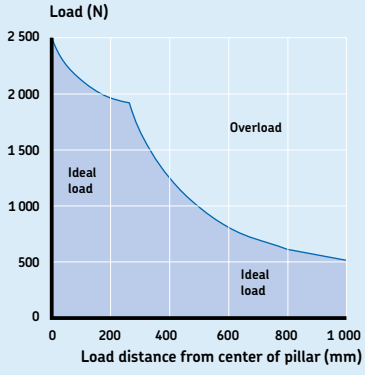

500 mm stroke

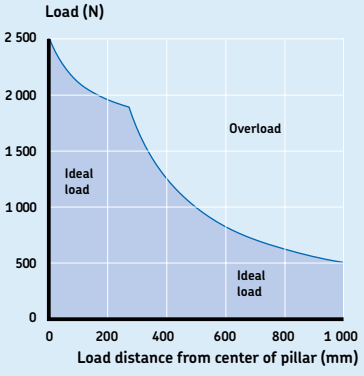

600 mm stroke

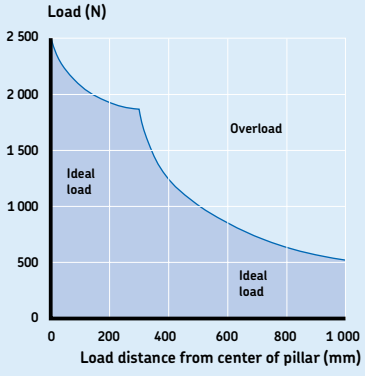

700 mm stroke

www.lmotion.ru lmotion-mail@ya.ru Тел.: (495)-921-34-60

Ordering key

TFG □ 0 – 23 □□□ □□□ – 000

Type

Voltage:

24 V DC	1
120 V AC (50/60 Hz)	5
230 V AC (50 Hz)	9

Stroke (S):

200 mm	200
250 mm	250
300 mm	300
350 mm	350
400 mm	400
500 mm	500
700 mm	700

Option:

No option	000
With 2-Hall encoder, 14 pulses per 9 mm travel	E
With mains cable feedthrough (3xAWG16)	C
With control cable feedthrough (10xAWG28)	H

Accessories

	Designation	Order N°
Top mounting plate Bore 72 × 72 mm	SMT–333360	M/0124808
Bottom mounting plate Bore 102,5 × 102,5 mm	SMT–264363	M/0124814
Screw for top mounting plate M10 × 25 (1 screw required)	ZBE–510978	M/0125359
Screw for top mounting plate M6 × 30 (4 screws required)	ZBE–510709	M/0125560
Screw for bottom mounting plate M6 × 30 (4 screws required)	ZBE–510709	M/0125560
Mains cable SEV plug 3 000 mm, black, 3 × 0.75 mm^2	ZKA–304345	M/0125331
Mains cable Schuko plug 3 000 mm, black, 3 × 0.75 mm^2	ZKA–304346–3000	M/0121729
Mains cable US plug 3 000 mm, black, 3 × 0.75 mm^2	ZKA–304347–3000	M/0121762
Mains cable British Standard plug 3 000 mm, black, 3 × 0.75 mm^2	ZKA–304355–3000	M/0121755

® SKF is a registered trademark of the SKF Group

© SKF Group 2010
The contents of this publication are the copyright of the publisher and may not be reproduced (even extracts) unless prior written permission is granted. Every care has been taken to ensure the accuracy of the information contained in this publication but no liability can be accepted for any loss or damage whether direct, indirect or consequential arising out of the use of the information contained herein.

Printed in Sweden on environmentally friendly paper.

PUB L5322,1675 EN · August 2010