Installation, operation
and maintenance manual

Magforce SLS

Linear Actuator

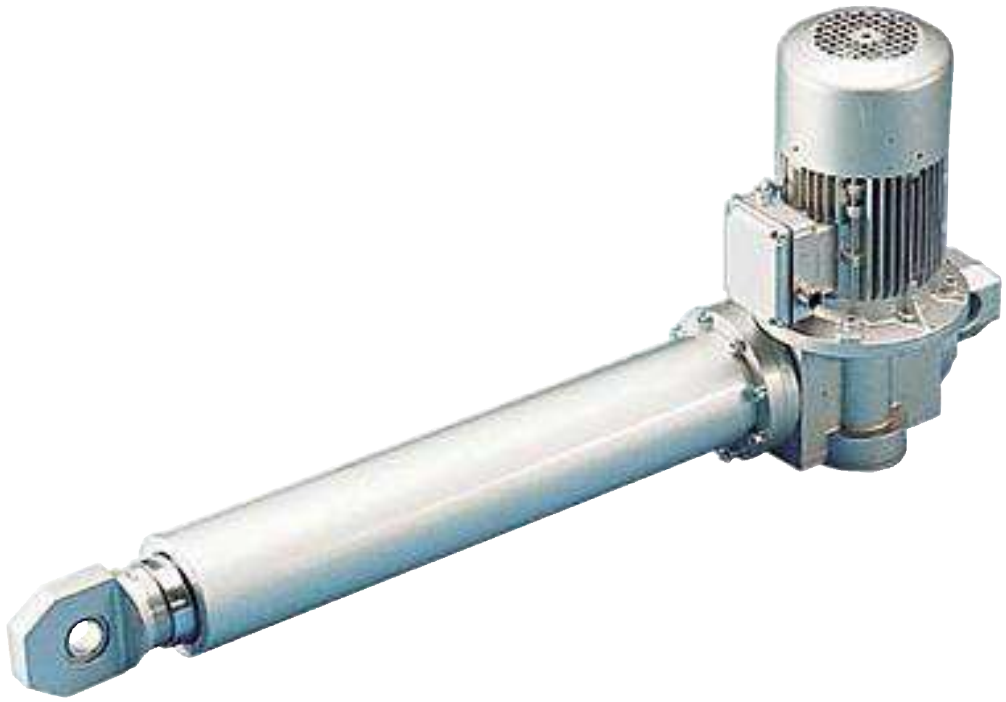

Read this manual before installing, operating or maintaining this actuator. Failure to follow safety precautions and instructions could cause actuator failure and result in serious injury, death or property damage.

Table of Contents

1. Overview linear actuators

SLS (three phase current)

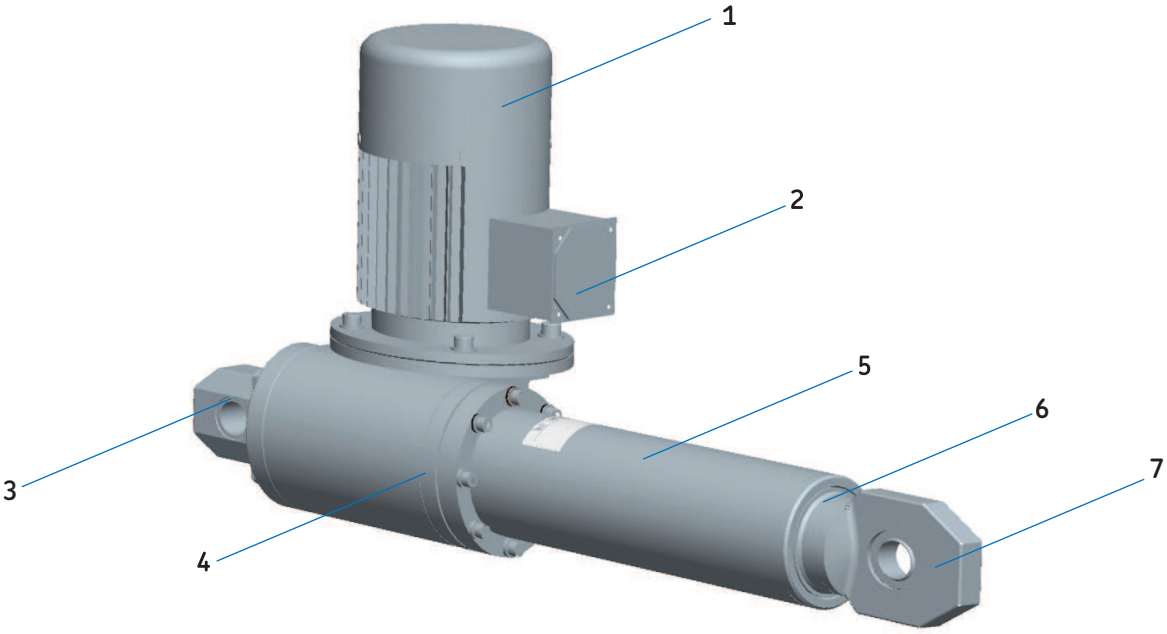

Fig. 1 Overview linear actuator Magforce

1. Motor unit with electrical brake (three-phase current)
2. Connecting terminal case
3. Rear trunion
4. Housing
5. Protection tube
6. Push tube
7. Fork head

2. Safety

2.1 General safety instructions

Magforce linear actuators have been designed, built and inspected for safe operation in accordance with state-of-the-art technology the standards (Machine Directive 89/392 EWG, Low Voltage Directive 73/23 EWG and EMV Directive 897 336 EWG) and have left the factory in a perfect and safe state. Despite this, the drive can be dangerous to persons and objects if they are not fitted and operated correctly. Therefore this operating manual must be read in detail and understood and the safety instructions must be taken note of. In the case of incorrect use and for incorrect purposes, the manufacturer rejects any kind of liability and guarantee.
The linear actuators described in Chapter 1 are machine parts in terms of the Machine Directive. They are only to be installed in machines and systems by specialist companies and institutions taking into account the valid guidelines and statutory regulations. Especially the following directives and the resulting laws and standards must be taken into consideration:

89/ 392 EWG EU machine directive
72/ 23 EWG EU low voltage directive
897 336 EWG EU-EMV guideline

Depending on the use of the machine or system into which the linear drive is to be installed, additional product or product group specific guidelines and standards may apply. It is the machine or system manufacturer who is responsible for ensuring that these guidelines and standards are complied with. Linear actuators may not be operated before all requirements specified in the EU machine directives regarding safety and health have been fulfilled.
In terms of EMV guidelines, linear actuators are classified as supplied parts for the exclusive use and processing by specialist companies. The measures required to comply with the MEV Safety regulations must be taken by the manufacturer of the end product taking into consideration the fitting conditions, wiring, control and switching and must be checked in accordance with its use.

2.2 Use in accordance with the regulations

Magforce linear actuators are only to be used for lifting purposes. Every other type of use is not permitted. Reconstruction and changes to the linear drives or the electrical installation is not permitted. Only original replacement parts and accessories from SKF may be used.

2.3 Identification of dangers

Throughout the operating manual, possible dangers and information are identified by the following symbols:

Warning!

This symbol identifies actions and conditions which can present danger to life and limb of persons. Read the instructions carefully.

Attention!

This symbol identifies all actions and conditions which can cause damage to objects. Read the instructions carefully.

Information!

This symbol identifies factual and useful information for the user.

The instructions regarding safety at work must be taken into account.

2.4 Safety at work

- Depending on the location of where the linear actuator will be used, protective devices must be installed to protect people from crush injuries.
  Please read the relevant insurance liability and product specific regulations.
- If this actuator is used in lifting gear or in applications which might endanger people, please contact SKF. In these cases, special safety nuts or secured fork heads which are available as an option must be used.
- If the linear actuator is in operation, people or objects must not be positioned in the vicinity of the stroke area of the linear actuator.
- Electrical connections at the client's site must be designed so that in the case of a power failure and subsequent supply of power, the actuator cannot start up again.
- Assembly and connection lines as well as technical data (load limits, operating times, ...) must be adhered to precisely in all aspect for the linear drives.
  Changes must be agreed with SKF beforehand.
- Without additional cooling measures, the housing of the linear actuator can reach a temperature of 130 °C. If there is a danger of people or inflammable objects coming into contact with the housing, a touch guard must be fitted.
- The inner limits must not be used as stroke limits. This can destroy the actuator.
  The actuator is not always self-locking. Static loads resting on the actuator can cause the actuator to move.
- Connection, wiring etc. may only be performed by specialist electricians or trained personnel taking into account the applicable standards and safety regulations.
- Before opening the device (connection case), the mains supply must be disconnected.
- No technical changes may be made to the actuator.

2.5 Technical progress

The manufacturer reserves the right to adapt technical data to the progress in technology without making any special announcements. SKF will gladly provide information regarding possible changes and extensions to the operating manual and whether they are up to date.

2.6 Guarantee

Assuming that the operating conditions have been adhered to and no prohibited changes have been made to the interior of the device and the devices show no mechanical damage, the manufacturer grants a guarantee of 1 year after delivery on all mechanical and electrical components.

3. Assembly and installation of the linear actuator

The linear actuator is fitted to the rear front and rear attachement points. Rotation of the push tube during operation is not permitted. The load to be moved may only act centrally on the push tube, lateral forces must be avoided. The actuator can be mounted in any position, but it must not be tilted.
Fixing regulations: Use fixing bolts with a shear strength of at least 1.2 times the nominal force of the drive.

WARNING!
The load to be moved must always act centrally on the connecting rod. Forces acting from the side must be avoided. When using in areas which could endanger people, a special securing nut and secured fork heads must be used in order to prevent the load moving in the case of overloading and nut breaking (see also Chapter 2.4 Safety at work). This must be taken into consideration during installation.

4. Electrical connection

4.1 Electrical connections for linear actuators

The motors must be connected in accordance with Fig. 2. The direction of rotation is reversed by polarity reversal via relays or push buttons.
Direct polarity reversal must be avoided due to the inertia force and to protect the switching elements.
The key or switch must return to the zero position automatically if the appropriate operating element has been enabled. At the stroke limits, the motor must only meet with resistance briefly before cutting out. Otherwise the use of stroke limit switches is necessary.
Stroke limit switching is available as an option.

WARNING!
The installation must be performed by trained electricians. Before installation, the mains supply to the devices must be disconnected!

Before connecting, please note the type designation SLS and the appropriate connecting information (see rating plate).

The electrical cables must be positioned such that they cannot be damaged by crushing, bending or tension. The cable entrance must be checked for tightness.

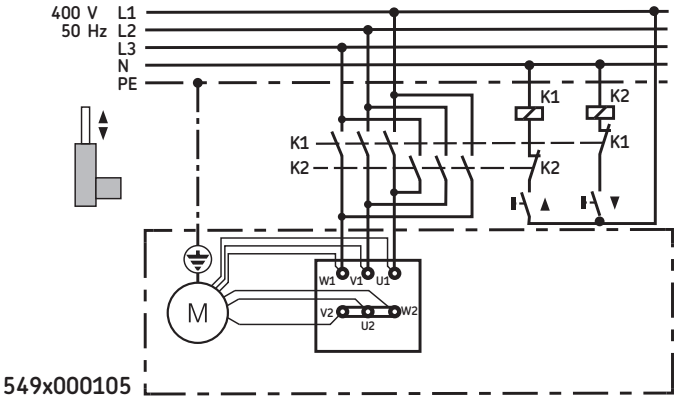

Fig. 2 Connection diagrams for linear actuator

4.2 Electrical connection of linear actuators with stroke limit switching

If the linear drive is equipped with end stroke limit switches, the drive must be connected in accordance with Fig. 3.
After the electrical connections have been made, it is necessary to see whether the direction of rotation (polarity, phase) of the motor is correct by briefly switching the motor on. If the direction of rotation is not correct, there is a danger that the stroke limits switches will be exceeded and therefore damaged.

WARNING
The installation must be performed by trained electricians. Before installation, the mains supply to the devices must be disconnected!

Before connecting, please note the type designation SLS and the appropriate connecting information (see rating plate).

The electrical cables must be positioned such that they cannot be damaged by crushing, bending or tension. The cable entrance must be checked for tightness.

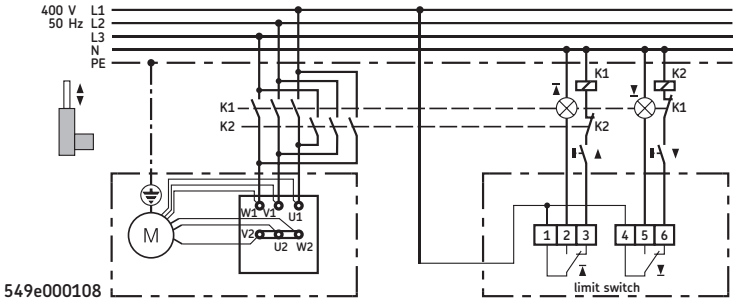

Fig. 3: Connecting diagrams for linear actuators with end stroke limit switches.

The instructions regarding safety at work must be taken into account.

4.3 Electrical connection of potentiometer

If the linear actuator is equipped with a potentiometer, the potentiometer must be connected in accordance with Fig. 4. The motor is connected according to voltage rating as described in Chapter 4.1.

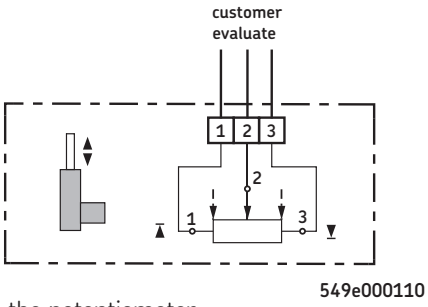

Fig. 4: Connecting the potentiometer

ATTENTION!
If the stroke limit switches have been set at the factory, the push tube may not be rotated as otherwise the setting of the stroke limit switch position is no longer correct.

4.4 Setting the end stroke limit switch (optional)

The optional stroke limit switches are fitted to the housing of the drive.
There are two openings in the cover through which the stroke limit switches are adjusted using an Allan key. The openings must be closed after adjustment. The stroke limit is adjusted by positioning the two stroke limit switches on the respective spindle (see Fig. 5). The push tube is secured to the rod housing with adhesive tape. If the push tube is rotated by hand, the setting of the lower stroke limit is not longer correct.
The stroke limit switches have been set to allow the greatest possible stroke (= 1...2 mm before the limit) at the factory before delivery.
Procedure:
Fit the cover of the end stroke limit switches once you have performed all electrical installations (see Chapter "Electrical connections") and have understood and checked the mechanical function of the limit switches. Remember that the connecting terminals carry voltage!
Then make sure that the motor is turning in the correct direction; if necessary change phase sequence/polarity.
Move the actuator to the desired lower limit.
Now turn the stroke limit switch for the lower limit against the control cam so that it connects.
Now proceed in the same manner for the upper limit.
Move the linear actuator up and down a number of times and if necessary make fine adjustments

WARNING!
Danger of electric shock! The installation work must be performed by trained electricians. Close the casing before you adjust the stroke limit switch. Terminals carry voltage.

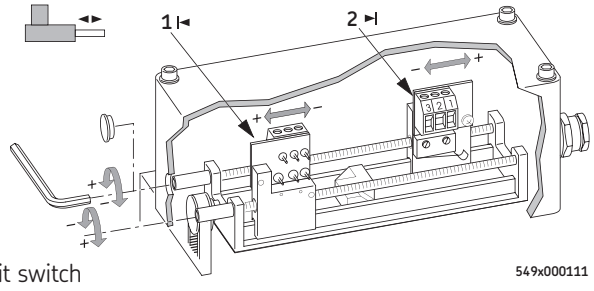

Fig. 5: Stroke limit switch

4.5 Setting the potentiometer (optional)

ATTENTION!
If the potentiometer was installed at the factory, the push tube may not be rotated manually as otherwise the setting of to the limit switches is not longer correct.

The optional potentiometer is fitted to the drive casing (see Fig. 6). The electrical connections are described in Chapter 4.3.
The data for the potentiometer are as follows:
Resistance: max. 1 kOhm ± 5 %, linear characteristic curve
nominal load capacity 3 W at 40 °C, 2 W at 70 °C

Procedure:
Fit the cover of the potentiometer after you have completed all electrical connections (see Chapter 4.3).
By moving the drive to different stroke lengths, changes in the resistance can be determined.
If whilst fitting the actuator the push tube was rotated by hand, the setting of the potentiometer is no longer correct (actuator lower stroke limit = 0 Ohm).
Move the actuator into the lower stroke limit and the basic setting of the potentiometer is reset. Otherwise the resistance values are incorrect. The potentiometer is equipped

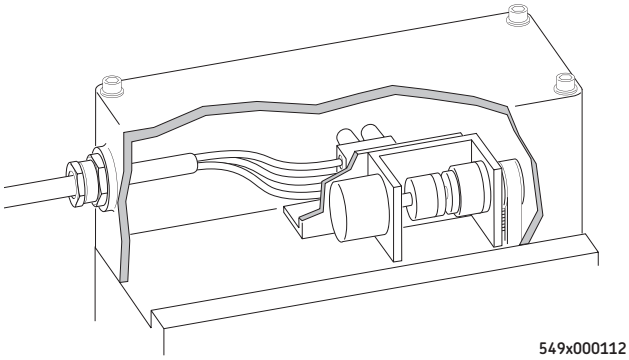

Fig. 6 Potentiometer

5. Operating / Starting up

After the mechanical and electrical installations have been performed correctly, the actuator can be started up. By applying short switch-on impulses you can see whether the actuator is rotating in the correct direction. It is important that it rotates in the correct direction especially if the actuator is equipped with a stroke limit switches device as otherwise a fault is possible.
The linear actuator is controlled using push button or relays (up/down).
The push button or switch must return to the zero setting automatically when the respective operating element is enabled.
Once the actuator has reached the stroke limits, the motor must switch off. Direct polarity reversal of the direction of rotation must be avoided to treat the motor with care.
The load stated on the rating plate and in the section listing technical data may not be exceeded; the actuator could be damaged if overloaded.

6. Electrical and mechanical data

Type SLS (three-phase current)		SLS 18006	SLS 34013	SLS 50020	SLS 50028	SLS 50050
Pressure / tensile strength	kN	18	34	50	50	50
Electrical brake (actuator self-braking)	kN	yes	yes	yes	yes	yes
Static load	kN	60	60	60	60	60
Thrust speed	mm/s	74	36	23	16	9
Stroke length	mm	100 to 700	100 to 700	100 to 700	100 to 700	100 to 700
Mains supply	V/50 Hz	3 x 400	3 x 400	3 x 400	3 x 400	3 x 400
Power consumption	W	3 000	3 000	3 000	2 000	1 900
Current consumption	A	3,9	3,9	3,9	3,5	3,0
Operating time (SD 10 min.)	%	10	10	10	10	10
Ambient temperature	°C	-10 to +40	-10 to +40	-10 to +40	-10 to +40	-10 to +40
Safety class/isolation class		I/B	I/B	I/B	I/B	I/B
level of protection	IP	54	54	54	54	54
Weight	kg	48	48	48	48	48

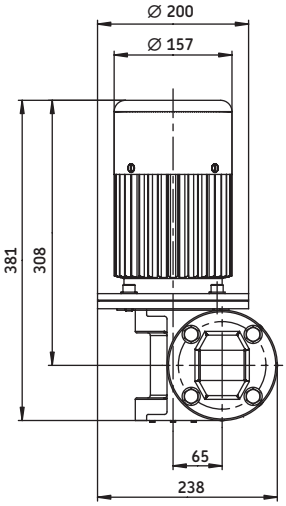

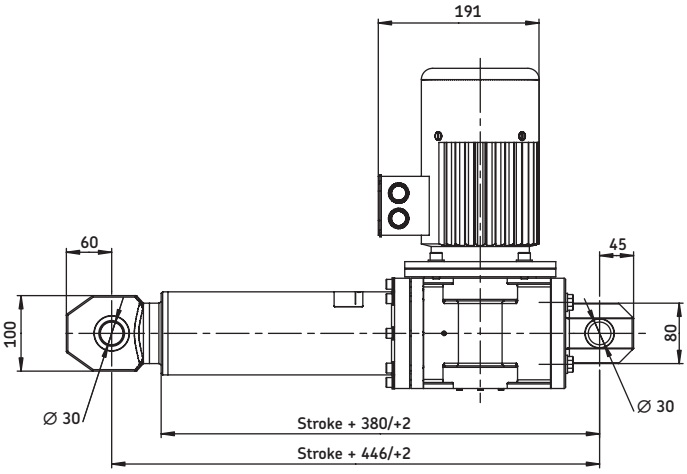

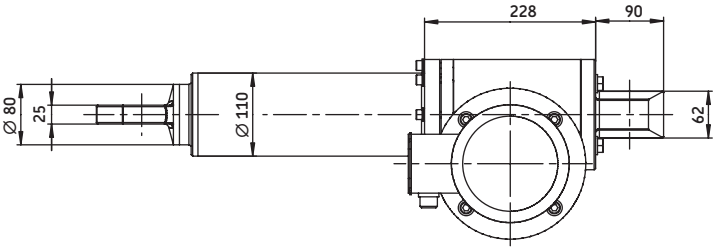

7. Maintenance and care

The linear actuator is equipped with a special nut and sufficient lubrication reserve and therefore requires no maintenance.
The service life of the actuator depends on the operating location and the operating period.
The push tube must be cleaned and lubricated from time to time. Defective motors must be repaired by SKF or by one of their authorised dealers.
For customer specific applications where the path-force-cycle ratios and environmental influences are known, the maintenance intervals are specified in the order confirmation or in a separate document.

8. Troubleshooting and rectification of faults

Repairs must be performed by SKF or by one of their authorised dealers.
Therefore please return a defective drive.
However, first check all electrical connections and mechanical components for possible defects.
If the actuator nut is broken, the actuator can continue to work under light loads on the safety nut (optional). A low power output and high power consumption point towards this type of damage. Regular operation is not permissible in this case. The device must be repaired at the manufacturer.

9. Technical support

If faults occur during the operation or guarantee period which cannot be rectified by trained electricians, please contact our internal experts.

10. Replacement parts and accessories

Accessory

Extended shaft

Customer specific drives are defined on the order confirmation.

11 End of life disposal

Your new set contains materials which can be recycled and reused. Specialized companies can recycle your product to increase the amount of reusable materials and minimize the amount of materials to be disposed of.
Please inform yourself on local regulations on disposal of your old set.

Manufacturer's address

Magnetic
Elektromotoren AG
Oristalstrasse 97
CH-4410 Liestal
Tel. + 61 / 925 41 11
Fax. + 61 / 921 37 04
e-mail: sales@magnetic.ch