www.lmotion.ru lmotion-mail@ya.ru Тел.:(495) 921-34-60

Roller screws

www.lmotion.ru lmotion-mail@ya.ru Тел.:(495) 921-34-60

® SKF is a registered trademark of the SKF Group.

© SKF Group 2014
The contents of this publication are the copyright of the publisher and may not be reproduced (even extracts) unless prior written permission is granted. Every care has been taken to ensure the accuracy of the information contained in this publication but no liability can be accepted for any loss or damage whether direct, indirect or consequential arising out of the use of the information contained herein.

PUB MT/P1 14489 EN · April 2014

This publication supersedes publication 4351.

Certain image(s) used under license from Shutterstock.com

www.lmotion.ru lmotion-mail@ya.ru Тел.:(495) 921-34-60

A Selection guide

B.1 Planetary roller screws SR

B.2 Ultra Power roller screws HR

B.3 Inverted roller screws ISR

B.4 Rotating nut with planetary roller screws SRR

B.5 Recirculating roller screws SV

B.6 Support bearings FLRBU

C Calculation formulae and example

D Recommendations for assembly

E Additional information

www.lmotion.ru lmotion-mail@ya.ru Тел.:(495) 921-34-60

Contents

A Product information

SKF – the knowledge engineering company 4

Selection guide 6
Planetary roller screws SR/BR, HR 6
Planetary roller screws PR, with internal preload 8
Inverted roller screws ISR/IBR 10
Rotating nut roller screws SRR/BRR 10
Recirculating roller screws SV/BV 11
Recirculating roller screws PV, with internal preload 11

Preferred range 12

Introduction to roller screws 14
SKF roller screws, high performance driving solutions 14
Typical applications for roller screws 16
Roller screws conceptual design advantage over ball screws . . 18

Technical concepts 19
Introduction to SKF roller screws 19
Basic dynamic load carrying capacity 19
Nominal fatigue life 19
Service life 20
Equivalent dynamic load 20
Basic static load carrying capacity 20
Critical rotating speed for screw shafts 21
Permissible speed limit and acceleration 21
Efficiency 22
Back–driving and braking torque 23
Break away torque 23
Driving torque 23
Static axial stiffness 23
Materials, heat treatment and coatings 24
Operating temperature 25
Screw shaft buckling or column strength 25
Shaft design 26
Product inspection and certification 27
Working environment 27

Lubrication 28
Lubrication for roller screws 28
Grease lubrication 29
Oil lubrication 34
Wipers 34
Dry lubricants 34

Axial play and preload 36
Axial play and preload 36
Preload and stiffness 36
Preload torque 38
Preload torque tolerances 38
Preload adjustment 40

Lead precision and manufacturing tolerances 42
Lead precision 42
Manufacturing tolerances 46

B Product data

Planetary roller screws SR 50
SRC/BRC planetary roller screws with cylindrical nut 52
SRF/BRF/SRP/BRP planetary roller screws with flanged nut . . 58
PRU preloaded planetary roller screws with cylindrical nut 64
PRK preloaded planetary roller screws with flanged nut 70

Ultra Power roller screws HR 74
HRC Ultra Power roller screws with cylindrical nut 76
HRF/HRP Ultra Power roller screws with flanged nut 80

Inverted roller screws ISR 84

Rotating nut with planetary roller screws SRR 88
SRR/BRR planetary roller screws with rotating nut 90

Recirculating roller screws SV 92
SVC/BVC recirculating roller screws with cylindrical nut 94
SVF/BVF recirculating roller screws with flanged nut 96
PVU preloaded recirculating roller screws with cylindrical nut . 98
PVK preloaded recirculating roller screws with flanged nut 100

www.lmotion.ru lmotion-mail@ya.ru Тел.:(495) 921-34-60

Support bearings FLRBU 102
FLRBU support bearings with angular contact ball bearings. . . 104
Standard machined ends 105
Recommendations for support bearings assembly and orientation. 106
Support bearings recommended for standard planetary roller screws 107
Support bearings recommended for recirculating roller screws 108
Preselection of spherical roller thrust bearings 109

C Calculation formulae and example

Calculation formulae 111

Calculation example 114

D Recommendations for assembly

Handling, storage, nut disassembly, support bearing assembly, alignment. 117
Alignment. 120

E Additional information 122

Technical request form 122
Symbols 124
Electro–mechanical cylinders 126
Linear Motion solutions 131
Designation system 132

www.lmotion.ru lmotion-mail@ya.ru Тел.:(495) 921-34-60

SKF – the knowledge engineering company

From one simple but inspired solution to a misalignment problem in a textile mill in Sweden, and fifteen employees in 1907, SKF has grown to become a global industrial knowledge leader.
Over the years, we have built on our expertise in bearings, extending it to seals, mechatronics, services and lubrication systems. Our knowledge network includes 46 000 employees, 15 000 distributor partners, offices in more than 130 countries, and a growing number of SKF Solution Factory sites around the world.

Research and development

We have hands-on experience in over forty industries based on our employees' knowledge of real life conditions. In addition, our world-leading experts and university partners pioneer advanced theoretical research and development in areas including tribology, condition monitoring, asset management and bearing life theory. Our ongoing commitment to research and development helps us keep our customers at the forefront of their industries.

Meeting the toughest challenges

Our network of knowledge and experience, along with our understanding of how our core technologies can be combined, helps us create innovative solutions that meet the toughest of challenges. We work closely with our customers throughout the asset life cycle, helping them to profitably and responsibly grow their businesses.

Working for a sustainable future

Since 2005, SKF has worked to reduce the negative environmental impact from our operations and those of our suppliers. Our continuing technology development resulted in the introduction of the SKF BeyondZero portfolio of products and services which improve efficiency and reduce energy losses, as well as enable new technologies harnessing wind, solar and ocean power. This combined approach helps reduce the environmental impact both in our operations and our customers' operations.

SKF Solution Factory makes SKF knowledge and manufacturing expertise available locally to provide unique solutions and services to our customers.

Working with SKF IT and logistics systems and application experts, SKF Authorized Distributors deliver a valuable mix of product and application knowledge to customers worldwide.

www.lmotion.ru lmotion-mail@ya.ru Тел.:(495) 921-34-60

Our knowledge – your success

SKF Life Cycle Management is how we combine our technology platforms and advanced services, and apply them at each stage of the asset life cycle, to help our customers to be more successful, sustainable and profitable.

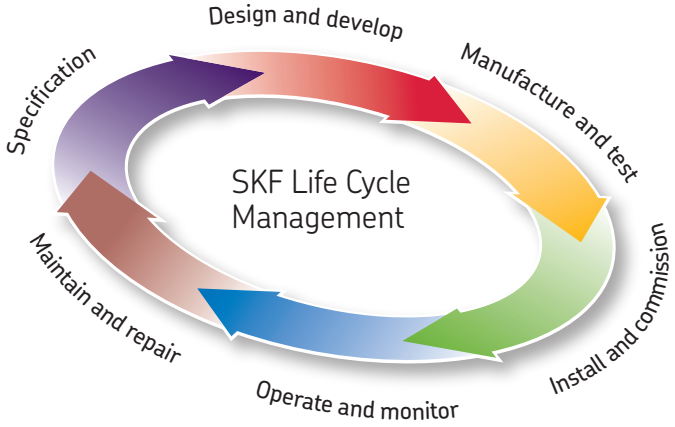

Working closely with you

Our objective is to help our customers improve productivity, minimize maintenance, achieve higher energy and resource efficiency, and optimize designs for long service life and reliability.

Innovative solutions

Whether the application is linear or rotary or a combination, SKF engineers can work with you at each stage of the asset life cycle to improve machine performance by looking at the entire application. This approach doesn't just focus on individual components like bearings or seals. It looks at the whole application to see how each component interacts with each other.

Design optimization and verification

SKF can work with you to optimize current or new designs with proprietary 3-D modelling software that can also be used as a virtual test rig to confirm the integrity of the design.

Bearings
SKF is the world leader in the design, development and manufacture of high performance rolling bearings, plain bearings, bearing units and housings.

Machinery maintenance
Condition monitoring technologies and maintenance services from SKF can help minimize unplanned downtime, improve operational efficiency and reduce maintenance costs.

Sealing solutions
SKF offers standard seals and custom engineered sealing solutions to increase uptime, improve machine reliability, reduce friction and power losses, and extend lubricant life.

Mechatronics
SKF fly-by-wire systems for aircraft and drive-by-wire systems for off-road, agricultural and forklift applications replace heavy, grease or oil consuming mechanical and hydraulic systems.

Lubrication solutions
From specialized lubricants to state-of-the-art lubrication systems and lubrication management services, lubrication solutions from SKF can help to reduce lubrication related downtime and lubricant consumption.

Actuation and motion control
With a wide assortment of products – from actuators and ball screws to profile rail guides – SKF can work with you to solve your most pressing linear system challenges.

www.lmotion.ru lmotion-mail@ya.ru Тел.:(495) 921-34-60

Selection guide

Planetary roller screws SR/BR, HR: Standard and maximum dynamic load carrying capacity C_a [kN]

Nominal diameter	Nut type	Lead [mm]									
d_0		2	4	5	6	8	9	10	12	15	18
mm	–	kN									
8	SR/BR	8,61	8,93								
12	SR/BR	–		14,1							
12	SR/BR	13,2		15,1							
15	SR/BR	–		26		27,4					
15	SR/BR	23,9		29,7		29,4					
18	SR/BR	30,4		37,7		38					
21	SR/BR	–		50,6	52,8	57		59,2			
21	SR/BR	47,4		57,8	60,3	65,2		63,6			
24	SR/BR				42,3				47,7		
24	SR/BR				47,3				53,3		
25	SR/BR			68,4		76,1		78,6		85,6	
25	SR/BR			78,2		87		89,8		91,9	
30	SR/BR			92	95	103		106		119	
30	SR/BR			105	109	117		122		127	
36	SR/BR				90,5		97,5		107		114
36	SR/BR				106		115		125		128
39	SR/BR			129				153		168	
39	SR/BR			148				174		192	
44	SR/BR					130			144		158
44	SR/BR					153			169		185
48	SR/BR			198		218		232		258	
48	SR/BR			240		250		265		295	
56	SR/BR								212		
56	SR/BR								249		
60	SR/BR							339		373	
60	SR/BR							387		426	
60	HR									494	
64	SR/BR								–		317
64	SR/BR								296		333
75	SR							505		561	
75	HR									836	
80	SR							365			420
80	SR							383			441
87	HR									1 059	
99	SR										
99	HR									1 277	
112,5	HR									1 396	
120	SR										
120	HR									1 547	
135	HR									1 843	
150	HR									2 200	
180	HR									3 073	
210	HR										
240	HR										

Standard number of rollers
Maximum number of rollers, on request
Preferred range

SR (C, F or P): Planetary roller screw with axial play
BR (C, F or P): Planetary roller screw without backlash
HR (C, F or P): Ultra Power planetary roller screw
C: Cylindrical nut, F: Centered flange, P: Off–centered flange

www.lmotion.ru lmotion-mail@ya.ru Тел.:(495) 921-34-60

Nominal diameter	Nut type	Lead [mm]								
d_0		20	24	25	30	35	36	40	42	50
mm	–	kN								
8	SR/BR									
12	SR/BR									
12	SR/BR									
15	SR/BR									
15	SR/BR									
18	SR/BR									
21	SR/BR									
21	SR/BR									
24	SR/BR									
24	SR/BR									
25	SR/BR									
25	SR/BR									
30	SR/BR	123								
30	SR/BR	132								
36	SR/BR		124							
36	SR/BR		138							
39	SR/BR	173		175						
39	SR/BR	198		188						
44	SR/BR		168		166					
44	SR/BR		188		185					
48	SR/BR	266		286	276					
48	SR/BR	304		327	316					
56	SR/BR		242				258			
56	SR/BR		284				289			
60	SR/BR	395								
60	SR/BR	452								
60	HR	515		530	528					
64	SR/BR		329		318		309			
64	SR/BR		346		356		346			
75	SR	572								
75	HR	845		855	852					
80	SR		452						398	
80	SR		474						445	
87	HR	1 061		1 085	1 085					
99	SR	925		937						
99	HR	1 311		1 328	1 330	1 329				
112,5	HR	1 421		1 446	1 455	1 461				
120	SR	1 131		1 127						
120	HR	1 587		1 585	1 614	1 640		1 651		
135	HR	1 858		1 903	1 904	1 921		1 909		1 944
150	HR	2 240		2 137	2 167	2 167		2 176		2 189
180	HR	3 123		3 002	3 009	3 023		3 075		3 128
210	HR	3 371		3 435	3 249	3 265		3 322		3 381
240	HR			3 919	3 931	3 994		3 808		3 860

www.lmotion.ru lmotion-mail@ya.ru Тел.:(495) 921-34-60

Planetary roller screws PR, with internal preload: Standard and maximum dynamic load carrying capacity C_a [kN]

Nominal diameter	Nut type	Lead [mm]									
d_0		2	4	5	6	8	9	10	12	15	18
mm	–	kN									
8	PR	4,74	4,92								
12	PR	–		7,76							
12	PR	7,25		8,32							
15	PR	–		14,3		15,1					
15	PR	13,1		16,4		16,2					
18	PR	16,8		20,8		20,9					
21	PR	–		27,9	29,1	31,4		32,6			
21	PR	26,1		31,8	33,2	35,9		35,0			
24	PR				23,3				26,3		
24	PR				26,1				29,4		
25	PR			37,7		41,9		43,3		47,2	
25	PR			43,1		47,9		49,5		50,6	
30	PR			50,7	52,3	56,5		58,6		65,4	
30	PR			57,9	59,8	64,6		67,0		70,1	
36	PR				49,8		53,7		58,7		62,9
36	PR				58,5		63,1		69,0		70,3
39	PR			71,2				84,1		92,4	
39	PR			81,4				96,1		106	
44	PR					71,9			79,2		86,9
44	PR					84,4			93,0		102
48	PR			109		120		128		142	
48	PR			132		138		146		162	
56	PR								117		
56	PR								137		
60	PR							187		206	
60	PR							213		235	
64	PR								–		177
64	PR								166		186

Standard number of rollers
Maximum number of rollers, on request

PR (U or K): Planetary roller screw with preloaded split nut
U: Cylindrical nut, K: Centered flange

www.lmotion.ru lmotion-mail@ya.ru Тел.:(495) 921-34-60

Nominal diameter	Nut type	Lead [mm]					
d_0		20	24	25	30	35	36
mm	–	kN					
8	PR						
12	PR						
12	PR						
15	PR						
15	PR						
18	PR						
21	PR						
21	PR						
24	PR						
24	PR						
25	PR						
25	PR						
30	PR	67,9					
30	PR	72,9					
36	PR		68,1				
36	PR		76,1				
39	PR	95,2		96,3			
39	PR	109		103			
44	PR		92,5		91,4		
44	PR		103		102		
48	PR	146		157	152		
48	PR	167		180	174		
56	PR		133				142
56	PR		157				159
60	PR	218					
60	PR	249					
64	PR		184		178		173
64	PR		193		199		193

www.lmotion.ru lmotion-mail@ya.ru Тел.:(495) 921-34-60

Inverted roller screws ISR/IBR: Standard dynamic load carrying capacity C_a [kN]

Nominal diameter	Nut type	Lead [mm]				
d_0		2,4	3	4	5	6
mm	–	kN				
18	ISR/IBR	35,6	37,8	36,6	37,8	40,4
21	ISR/IBR	55,5	59,6	63,3	61,5	64,2
24	ISR/IBR	63,7	67,2	72	75,3	74,5
30	ISR/IBR	93,2	99,2	105	111	117
39	ISR/IBR	135	143	153	161	169
48	ISR/IBR	209	221	234	247	259

ISR: Inverted roller screw with axial play
IBR: Inverted roller screw without backlash

Rotating nut roller screws SRR/BRR: Standard dynamic load carrying capacity C_a [kN]

Nominal diameter	Nut type	Lead [mm]				
d_0		5	10	15	20	25
mm	–	kN				
25	SRR/BRR	68,4	78,5	85,6		
30	SRR/BRR	91,9	106	119	123	
39	SRR/BRR	129	153	168	173	175
48	SRR/BRR	198	232	258	266	286
60	SRR/BRR		339	373	395	

SRR: Rotating nut roller screw with axial play
BRR: Rotating nut roller screw without backlash

www.lmotion.ru lmotion-mail@ya.ru Тел.:(495) 921-34-60

Recirculating roller screws SV/BV: Standard dynamic load carrying capacity C_a [kN]

Nominal diameter	Nut type	Lead [mm]				
d_1		1	2	3	4	5
mm	–	kN				
8	SV/BV	8,5				
10	SV/BV	8,95	8,95			
12	SV/BV	10,3	10,3			
16	SV/BV	11,5	11,5			
20	SV/BV	18,5	18,5			
25	SV/BV	32,9	32,9			
32	SV/BV	64,3	64,3			
40	SV/BV	79,1	49,9			
50	SV/BV	190	98,1	153	98,1	
63	SV/BV		186		186	
80	SV/BV				325	
100	SV/BV					469
125	SV/BV					756

■ Preferred range

SV (C or F): Recirculating roller screw with axial play
BV (C or F): Recirculating roller screw without backlash
C: Cylindrical nut, F: Centered flange

Recirculating roller screws PV, with internal preload: Standard dynamic load carrying capacity C_a [kN]

Nominal diameter	Nut type	Lead [mm]				
d_1		1	2	3	4	5
mm	–	kN				
8	PV	4,88				
10	PV	5,14	5,14			
12	PV	5,96	5,96			
16	PV	6,71	6,71			
20	PV	10,6	10,6			
25	PV	18,9	18,9			
32	PV	36,9	36,9			
40	PV	45,4	28,7			
50	PV	109	56,3	88	56,3	
63	PV		107		107	
80	PV				187	
100	PV					269
125	PV					434

PV (U or K): Recirculating roller screw with preloaded split nut
U: Cylindrical nut, K: Centered flange

www.lmotion.ru lmotion-mail@ya.ru Тел.:(495) 921-34-60

Preferred range

The SKF preferred range encompasses the most frequently used sizes of planetary roller screws and recirculating roller screws. Within that assortment, standard size nuts are stocked at SKF factories in Europe and North America for improved availability, greater value, and shorter delivery times. Shafts are manufactured according to customer requirements.

Design and manufacturing operations	• Standard roller screws with standard load ratings are available with axial play (SR or SV prefix), or without backlash (BR or BV prefix) • Nut dimensions are detailed hereafter • Standard shaft end machining can include turning, milling and grinding operations • End machining is available for SKF support bearings
Materials	• For the preferred range, shafts and nuts are manufactured with standard high quality roller screw steel, detailed in the present SKF catalogue *Roller screws* • Stainless steel and special treatments are not available with the preferred range
Capabilities	• Machining operations such as splines, hollow shaft, etc. are possible, but might require more time to complete • Unless specified, manufacturing tolerances will be according to ISO 3408–3 class 5 • Lead precision is G5 according to ISO standards. G3 and G1 also possible on request • Screw assemblies are shipped with a protective rust inhibitor coating • Special documents can be supplied on request: Certificate of conformity to customer drawings # 1969981, lead precision curve • Matching FLRBU support bearings size 2 to 6 can be delivered with the screws
Export note	• Product for nuclear, aerospace or military applications may be subject to export restrictions and/or licensing requirements. In such cases, delivery time shall be dependent upon securing approvals from the appropriate governmental authority.

www.lmotion.ru lmotion-mail@ya.ru Тел.:(495) 921-34-60

Planetary roller screws with standard nuts in stock

- SRC cylindrical nut with axial play
- BRC cylindrical nut without backlash
- SRF flanged nut with axial play
- BRF flanged nut without backlash
- SRC/BRC/SRF/BRF nuts with wiper recesses as standard
- Standard wipers supplied on request

SRC/BRC cylindrical nut with wipers

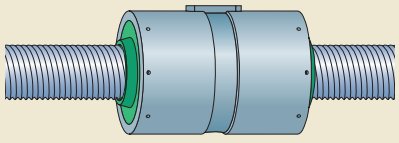

SRF/BRF flanged nut with wipers

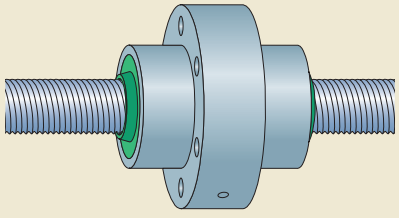

Nominal diameter	Lead (right hand)	Basic load rating SRC/BRC nut		SRF/BRF nut		Maximum total shaft length
d_0	P_h	C_a	C_{0a}	C_a	C_{0a}	L_{tp}
mm		kN				mm
15	5	26	43,6			975
21	5	50,6	82			1 400
21	10	59,2	83			1 400
30	5	92	178			2 000
30	10	106	174			2 000
39	5	129	269	129	269	2 650
39	10	153	271	153	271	2 650
48	5	198	482	198	482	3 300
48	10	232	475	232	475	3 300

Recirculating roller screws with standard nuts in stock

- SVC cylindrical nut with axial play
- BVC cylindrical nut without backlash
- SVC/BVC nuts without wiper recess, no wiper availability

SVC/BVC cylindrical nut

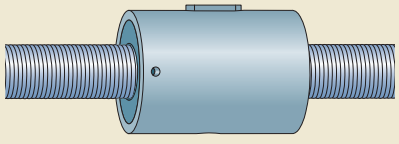

Nominal diameter	Lead (right hand)	Basic load rating SVC/BVC nut		Maximum total shaft length
d_1	P_h	C_a	C_{0a}	L_{tp}
mm		kN		mm
20	1	18,5	36,6	1 300
25	1	32,9	68,4	1 650
32	1	64,3	159	2 150

www.lmotion.ru lmotion-mail@ya.ru Тел.:(495) 921-34-60

Introduction to roller screws

SKF roller screws, high performance driving solutions

A wide assortment of industries rely on SKF roller screws for their actuation requirements. Leading the trend to move from traditional forms of linear actuation, SKF roller screws represent the state of the art driving force for powerful electro–mechanical actuation.

SKF is a pioneer in the technology of roller screws and offers high quality, high performance and the widest assortment of roller screws available on the market.

The SKF in–house highly integrated manufacturing process uses the latest machining technology including soft and hard machining, heat treatment (induction and through hardening), grinding and assembly operations. SKF manufacturing facilities also house laboratories dedicated to life tests, tribology, noise measurement and metallurgy. Beyond the standard assortment made from high grade bearing steel, SKF offers special variants with stainless steel and high temperature steel combined with coatings, etc. to respond to the most demanding applications.

SKF offers three main variants of planetary roller screws that do not require roller recirculation:

- The traditional SR assortment with threaded rollers synchronized to the nut, thanks to identical helix angle for the rollers and the nut
- The HR Ultra Power roller screws with increased capabilities compared to the SR assortment
- The ISR inverted roller screws with threaded rollers synchronized to the screw shaft, thanks to identical helix angle for the rollers and the shaft.

In addition, SKF offers special variants of planetary roller screws:

- The SRR rotating nut roller screws
- Zero lead roller screws that can advantageously replace a traditional thrust bearing solution when extreme axial load carrying capacity, low weight and compactness are required.

SKF offers a wide assortment of recirculating roller screws. Since the rollers are circumferentially grooved, after each complete revolution around the nut, the grooved rollers must be recirculated back to their starting point on one side of the nut, with the help of cams and axial groove inside the nut.

Small leads are possible with a relatively larger thread pitch on the shaft and nut. This feature offers the ideal combination of small lead, high load carrying capacity, a high degree of stiffness and precision.

Nevertheless, the recirculating roller screws present lower speed and acceleration capabilities than planetary roller screws.

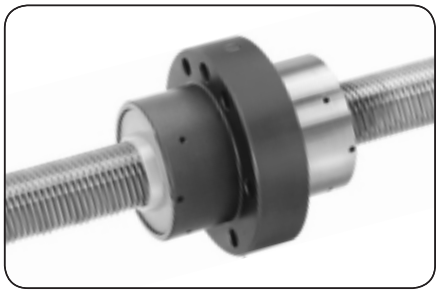

Planetary roller screws SR
- *Wide assortment of diameters and leads for numerous applications*
- *Reliable driving solution with high loads and speeds capabilities*

Ultra Power planetary roller screws HR
- *Extreme load carrying capacity*
- *Robustness and long service life for highly demanding applications*

Inverted planetary roller screws ISR
- *All the feaures and benefits of the planetary roller screw design*
- *Plus small leads, high load carrying capacity within a compact design*

www.lmotion.ru lmotion-mail@ya.ru Тел.:(495) 921-34-60

Rotating nut planetary roller screws SRR
- *Operation similar to electro-mechanical cylinders*
- *Compact, integrated support bearing and roller screw nut functions*

Zero lead roller screws
- *Thrust bearing solution for special applications*
- *High thrust carrying capacity with compactness*

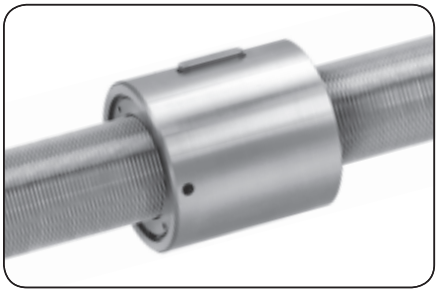

Recirculating roller screws SV
- *Small leads associated with high load carrying capacity*
- *Fine resolution and stiffness for ultra precision applications*

Expectations with electro–mechanical actuation	**SKF roller screw solutions**
Increased productivity for industrial grade applications with operational duty cycle over 70%	High load carrying capacity and cycling capability Accommodate high accelerations and high speeds
Up to 70% energy savings compared to hydraulic and pneumatic actuation technologies	Mechanical efficiency usually greater than 80%
Functionality, flexibility and controllability	Widest assortment of roller screws available on the market Accommodate heavy loads with transportation applications Provide accuracy for positioning applications Custom designs and flexible manufacturing equipment
Reliability	By design, the planetary roller screw offers greater reliability than other driving solutions
Higher repeatability and process stability	Limited wear, in particular for screws that have been run in at the factory
Easy integration into work cells and existing systems	High power density
Higher degree of precision	High degree of positioning accuracy further increased without backlash or with preload Recirculating roller screws with small leads are recommended for ultra–precision applications
Low noise levels	Very smooth and quiet operation with planetary roller screws
Cleanliness	Roller screws consume a very small amount of lubricants
Lower total cost of ownership (TCO) compared to traditional types of actuation	Long service life and reliability

www.lmotion.ru lmotion-mail@ya.ru Тел.:(495) 921-34-60

Typical applications for roller screws

Application examples		Why SKF customers choose roller screw technology
Plastic moulding Injection moulding, blow moulding, thermo–forming		Improved machine productivity, energy savings, cleanliness.
Broaching Automotive and aircraft industries		Smooth continuous cutting operation. A high degree of stiffness provides a better surface finish for the part.
Electro–mechanical press Top slide and die cushion for forming press Punching press		Dynamic load rating up to 4 000 kN, the force of hydraulic actuation, the speed of pneumatic actuation.
Factory automation Gluing, riveting, welding, clinching, joining, bending, clamping, etc.		Accurate and repeatable, faster resetting, energy savings, reduced downtime, cleanliness, compactness.
Oil & gas industry Surface and subsea valves, downhole tools, offshore equipment		Robust, compact, high power density and high temperature rating.

www.lmotion.ru lmotion-mail@ya.ru Тел.:(495) 921-34-60

Application examples		Why SKF customers choose roller screw technology
Aerospace Aileron, flap, slat, landing gear, wheel steering, ram air door, thrust reverser		Efficiency, reliability, weight saving, compact.
Railway Titling actuators, active suspension		Reliability, robustness, low maintenance.
Steel industry Tundish car, ladle turret, continuous casting		High power density, high degree of reliability in extremely harsh environments.
Space and telescope Optical focus, mirror shape control, solar arrays release	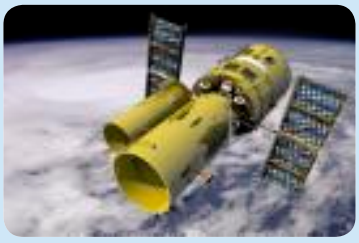	High resolution, precision and stiffness.
Simulator Flight simulator, wave simulator, engineery test benches, entertainment equipment		High speeds and accelerations, fast and accurate positionning and response.

www.lmotion.ru lmotion-mail@ya.ru Тел.:(495) 921-34-60

Roller screws conceptual design advantage over ball screws

With planetary roller screws, the application load is transmitted from the nut to the shaft through the barrel–shaped surfaces of the rollers. The number of contacts and the total surface area of the contacts between the shaft, the rollers and the nut are substantially increased compared to the ball screw design, resulting in larger dynamic and static load carrying capacities (→ **fig. 1**).

The absence of recirculating element embodies the fundamental conceptual advantage of the planetary roller screws. This feature eliminates the main failure mode of ball screws, that is linked to the recirculation of the balls. Indeed, recirculating heavily loaded balls induces alternate stresses on the balls and shock loads arising from the change of trajectory.

In addition, satellite rollers never come into contact with each other. This is a significant advantage of this product over most ball screw designs. Balls come into contact with each other in most ball screw designs, generating friction and adding a potential failure mode to the ball screw concept.

With recirculating roller screws, the application load transfers from the shaft to the nut through a set of grooved rollers. This design permits very small leads while offering high load carrying capacity and axial stiffness. This mechanical advantage minimizes input torque and increases application resolution and performance. They can simplify a complete transmission and improve its rigidity. They are often used in applications involving advancing technology where reliable optimum performance is essential.

Roller screw concept	Advantages over a ball screw	User benefits
Large number of contact points	High load carrying capacity and up to 10 times longer service life	Lower total cost of ownership (TCO)
Satellite rollers	Roller screw rotational speeds up to 50% higher than a ball screw with similar carrying capacity	Increased speed of operations
	Roller screw acceleration up to 3 times higher	Higher productivity
	Absence of recirculation eliminating a significant failure mode	Higher degree of reliability
Planetary roller screws with small lead (down to 2,00 mm)	High load carrying capacity compared to ball screws with small lead which are designed with small diameter balls which have low load carring capacity	High load carrying capacity combined with positioning accuracy and reduced torque requirements
Evenly spaced planetary or recirculating rollers	Good operation in applications with changes of direction, stable friction torque	Low noise High degree of reliability
Recirculating roller screws with small lead down to 1 mm	High load carrying capacity, high axial stiffness that cannot be obtained with a ball screw of similar lead and diameter Very small imput torque	High resolution, high stiffness, long service life, robustness

Fig. 1

Comparison of ball screws and roller screws contact area

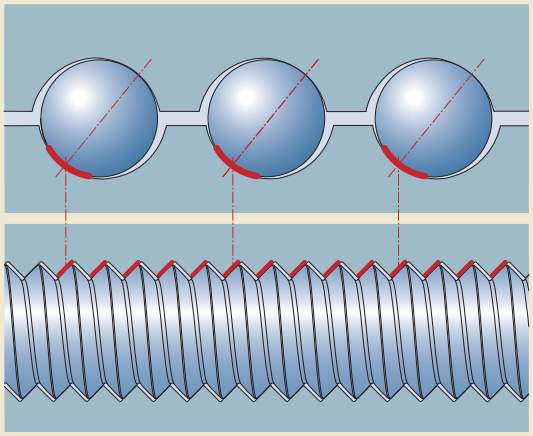

www.lmotion.ru lmotion-mail@ya.ru Тел.:(495) 921-34-60

Technical concepts

Introduction to SKF roller screws

Roller screws convert rotary motion into linear motion and vice–versa. Loads are transferred from the screw shaft to the nut through a roller set, therefore, roller screws relate to general bearing technology. Various types of bearing steel are used to attain the hardness and material fatigue properties required for carrying heavy application loads over extended periods of service. Certain bearing concepts such as load ratings, load cycles, nominal calculated life and service life, stiffness, speed ratings, lubrication requirements, etc. are explained below to guide customers through the roller screw selection process. The selection parameters are included in this chapter. To make the best selection of a roller screw, the designer should consider the following parameters such as the load cycle, the linear or rotational speed, the required life, the rates of acceleration and deceleration, the cycle rate, the environment, the lead accuracy, the stiffness, and any other special requirements.

For additional information about the roller screws selection process, please contact your local SKF representative.

Basic dynamic load carrying capacity C_a

The dynamic load carrying capacity is used to compute the nominal fatigue life of roller screws. It corresponds to the axial load, constant in magnitude and direction, concentric with the roller screw axis, under which the calculated nominal fatigue life as defined by ISO 3408–5 reaches one million revolutions.

Nominal fatigue life L_{10}

Nominal fatigue life L_{10} is, according to the ISO definition, the life attained or exceeded by 90% of a sufficiently large group of identical roller screws, working under identical conditions (alignment, axially and centrally applied load, speed, acceleration, lubrication, temperature and cleanliness).

The nominal life of a roller screw is the statistical number of millions of revolutions which the roller screw is capable of reaching before the first signs of flaking signifying material fatigue occurs on one of the rolling surfaces.

When reliability greater than 90% is required, the calculated nominal life must be corrected. See values for the correction factor in **table 1**. For example, if a reliability of 98% is required, $L_2 = 0{,}33\ L_{10}$ where L_{10} is calculated using the formulae in **pages 111** to **113**.

Table 1

Correction factor for reliability

Reliability [%]	Correction factor	L_n
90	1,00	L_{10}
95	0,62	L_5
96	0,53	L_4
97	0,44	L_3
98	0,33	L_2
99	0,21	L_1

www.lmotion.ru lmotion-mail@ya.ru Тел.:(495) 921-34-60

Service life

The actual life achieved by a specific roller screw is known as service life. In addition to material fatigue, service life can be reduced by inadequate lubrication, wear, corrosion, contamination and, more generally, loss of the functional characteristics required by the application.

Experience with similar applications will help in selecting the right screw to obtain the desired service life. Structural requirements such as the strength of screw ends and nut attachments should also be considered.

To attain L_{10} life performance, the maximum cycle operating load F_{max} should not exceed 80% of C_a (for SR and SV product assortments) to limit the Hertzian pressure at the rollers/raceways contact points.

For small strokes (shorter than the nut length) or short oscillations, additional considerations such as the actual total number of loading cycles on any specific area of the shaft, and the false brinelling effect should be taken into account[1)].

Equivalent dynamic load F_m

The loads acting on the screw can be calculated according to the laws of mechanics if the external forces are known or can be calculated. For product sizing and selection, it is necessary to calculate the equivalent dynamic load: this is the hypothetical load, constant in magnitude and direction, acting axially and centrally on the screw, which, if applied, would have the same influence on the screw life as the actual loading conditions which the screw will be subjected to.

Radial and moment loads must be accommodated by linear guides. It is extremely important to resolve these possible problems early in the design stage. Radial forces are detrimental to the life and expected performance of the screw (→ **fig. 2**). Please refer to the chapter entitled *Recommendations for assembly*.

If misalignment, uneven loading, shock loads, etc. cannot be avoided, they must be taken into account during the sizing of the screw.

Their influence on the screw's nominal life can generally be estimated[1)].

Basic static load carrying capacity C_{0a}

Roller screws should be selected based on the basic static load carrying capacity C_{0a}, rather than the basic dynamic load carrying capacity, when they are subjected to continuous or intermittent shock loads while operating in stationary conditions for short periods of time.

The permissible load is determined by the permanent deformation caused by the load acting at the contact points. The static load carrying capacity is, according to ISO standards, the purely axially and centrally applied static load which creates, by calculation, a total (rolling element + threaded surface) permanent deformation equal to $^1/_{10\,000}$ of the curvature diameter of the rolling element.

In order to prevent surface damage, to keep smooth running and low noise level, SKF recommends that the application loads do not exceed 80% of the static load carrying capacity C_{0a}.

Usually the C_{0a} value corresponds to a Hertzian contact pressure ranging between 4 500 and 4 800 MPa.

The basic dynamic and static load carrying capacities are related to the material properties, and vary with the material hardness at the contact points. Please refer to the paragraph explaining "materials, heat treatment and coatings" (→ **page 24**).

The basic static load carrying capacity must be, at a minimum, equal to the product of the maximum applied axial static load and a static safety factor s_0. Past experience with similar applications and requirements of maximum static load occurrence, running smoothness and noise level will guide the selection of s_0[1)].

In order to prevent surface damage, to keep smooth running and low noise level, SKF recommends that the application loads do not exceed 80% of the static load carrying capacity C_{0a}, which equates to a static safety factor s_0 of 1,25.

For applications requiring high precision, roller screws should operate significantly below the static load carrying capacity, which means operation with a higher value for the static safety factor s_0.

For heavily loaded applications where precision, noise level and running smoothness are not critical to the performance expectations, roller screws can operate at load levels close to the basic static load carrying capacity. With these conditions, special care must be paid to proper lubrication.

Fig. 2

Permissible and prohibited loading on roller screw

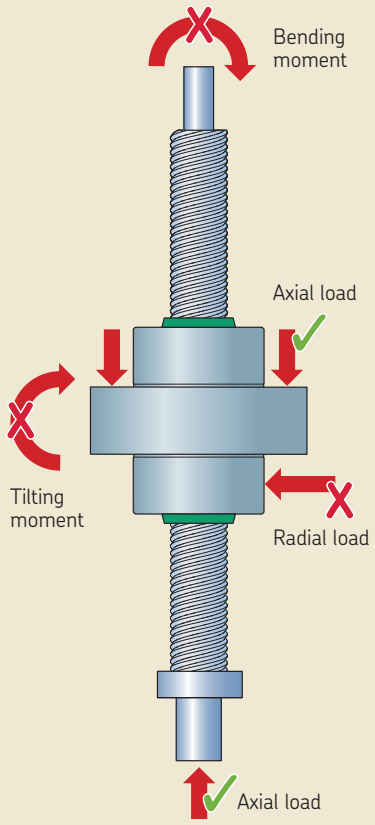

[1)] For additional information, please contact your local SKF representative

www.lmotion.ru lmotion-mail@ya.ru Тел.:(495) 921-34-60

Critical rotating speed for screw shafts n_{cr}

A roller screw with the nut in a given position has a natural frequency of vibration in bending mode. When the screw shaft is rotating, it is important that the rotational speed not excite its natural frequency. If it does, it would result in elastic radial deflection of the shaft. In extreme conditions, without damping, the screw shaft could be bent. The natural frequency of the roller screw changes continuously as the nut moves along the shaft and in relation to the shaft supports. The positive effect of this axial nut displacement is that there is generally no time for the amplitude of the vibration at a given natural frequency to build up.

For calculation of the critical rotating speed, the shaft is the equivalent of a cylinder with an external diameter equal to the root diameter of the thread. The formula uses a parameter whose value is dictated by the mounting of the screw shaft ends, whether the screw shaft end is free, radially supported or fixed.

As a general rule, the nut is not considered to be a support for the screw shaft. Because of the potential inaccuracies in the mounting of the screw assembly, a safety factor of 0,8 is applied to the calculated critical speed.

Calculations where the nut is considered to be a support for the shaft or calculations which reduce the safety factor, require practical tests and possibly optimization of the design.

Permissible speed limit (n d_0) and acceleration

The permissible speed limit is the speed that a screw cannot reliably exceed at any time. It corresponds to the limiting speed of the rotation of rollers (SR and ISR types) or of the recirculation of the rollers (SV type) inside the nut. It is expressed as the product of maximum rotational speed n (r/min) and the nominal diameter d_0 (mm) of the screw shaft. The speed limits quoted in this catalogue are the maximum speeds that may be applied for short periods of time with optimized conditions of alignment, light external load or preload, and with appropriate lubrication.

Permissible speed limits for each technology:

- Planetary roller screw (SR) and inverted roller screw (ISR):
  $n\ d_0 \leq 160\ 000$
- Recirculating roller screw (SV):
  $n\ d_1 \leq 30\ 000$ for $d_1 \leq 25$ mm
  $n\ d_1 \leq 20\ 000$ for $d_1 > 25$ mm

Running a screw continuously at the permissible speed limit may reduce the service life of the nut mechanism.

Important:
High speeds combined with high loads yield a relatively short nominal life[1)].

In the case of high accelerations, decelerations or fast movement reversal, SKF recommends either working under a nominal external load or applying a light preload to the nut to avoid roller sliding on the shaft.

The preload for screws subjected to high accelerations must be calculated to be sure that the rolling elements do not slide[1)].

However, excessive preload will generate an unacceptable increase in frictional heat.

Roller screws preloaded for optimum rigidity (PR or PV prefix) should not be operated continuously at high speeds.

Recirculating roller screws should not be operated at permanent high linear speeds or at their maximum speed rating. High speeds will be detrimental to the recirculation cam's life. In addition, noise levels will increase.

1) For additional information, please contact your local SKF representative

www.lmotion.ru lmotion-mail@ya.ru Тел.:(495) 921-34-60

Efficiency η

Screw performance depends primarily on the geometry of the contact surfaces, their finish and the helix angle of the thread.

It also depends on the working conditions (load, speed, lubrication, preload, alignment, etc.)

Direct efficiency η is used to define the input torque required to transform the rotation of one component into the translation of another (→ **diagram 2**).

Conversely, indirect efficiency η' is used to define the axial load required to transform the translation of one component into the rotation of another one. It is also used to define the braking torque required to prevent that rotation (→ **diagram 3**).

The reference coefficient of friction μ_{ref} would be achievable with perfect operating conditions of lubrication, alignment, etc. and it would result in generating a theoretical direct efficiency η, or a theoretical indirect efficiency η'. Because such laboratory conditions are not encountered with real applications, we define a practical coefficient of friction μ_{prac} used to estimate the practical efficiencies η_p and η'_p.

Practical efficiencies range between the starting efficiencies of a newly installed screw and that of a properly run–in screw. These practical values of efficiency are calculated with a practical value for the coefficient of friction μ_{prac}.

To account for real installation, running conditions and the experience of real life application, this practical coefficient of friction μ_{prac} corresponds to the reference coefficient of friction μ_{ref} increased by 30% (→ **diagram 1**).

This calculation method reduces the practical efficiency of the screw versus its theoretical efficiency by about 5%.

Generally, the practical efficiency increases with speed, and over time with running in effect.

Note:
The helix angle alpha can be calculated using formula **pages 112**.

Diagram 1

Reference and practical coefficient of friction

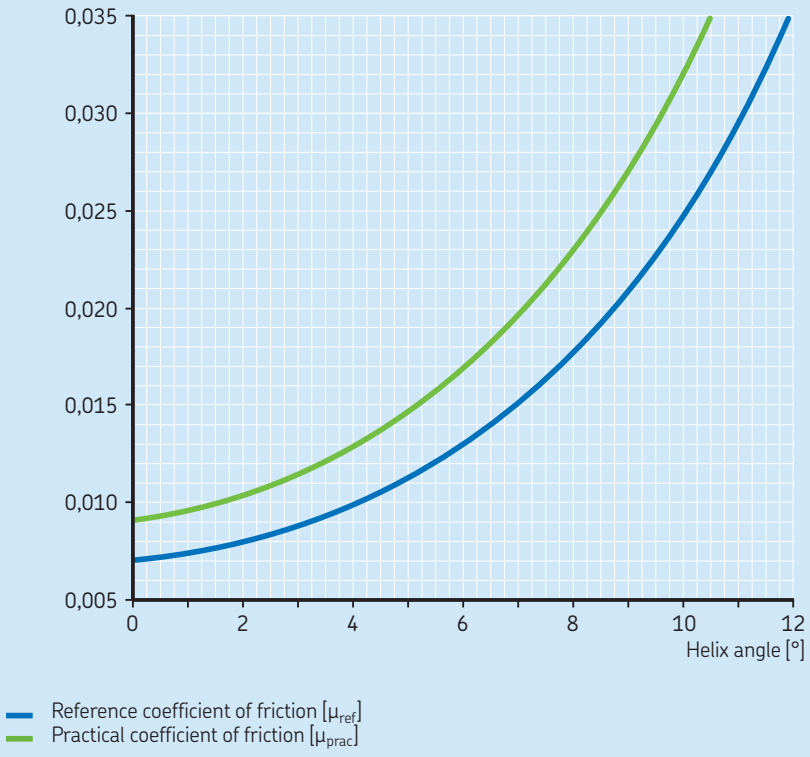

Diagram 2

Theoretical and practical direct efficiency

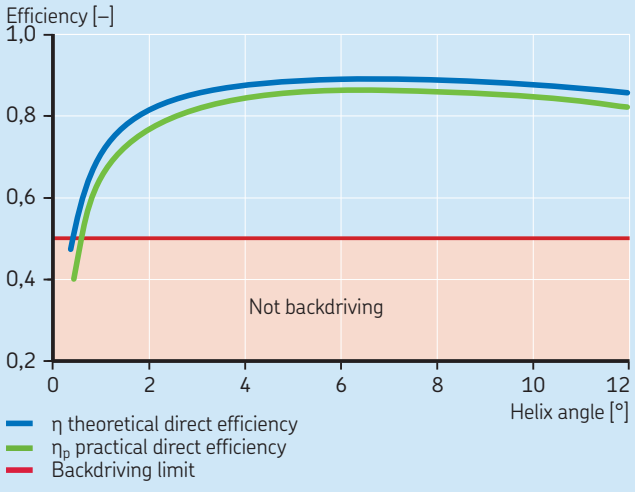

Diagram 3

Theoretical and practical indirect efficiency

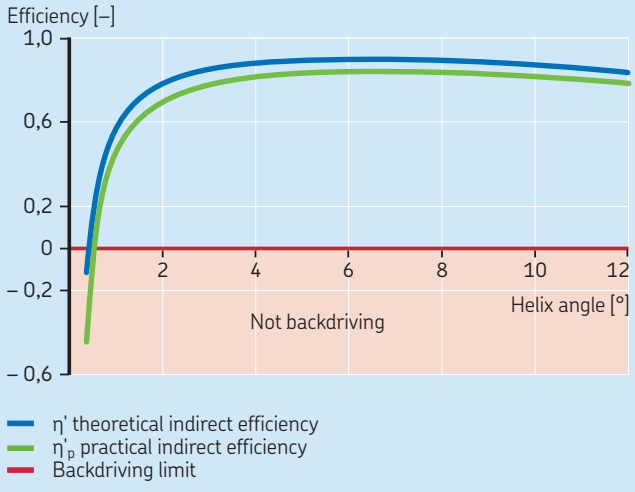

www.lmotion.ru lmotion-mail@ya.ru Тел.:(495) 921-34-60

Back–driving and braking torque T_b

Except for one specific recirculating roller screw dimension (SV 50 × 1) and for some specific sizes of inverted roller screws, roller screws are reversible or can be back–driven under most circumstances.

A braking mechanism (gear reducer or brake) must be part of the design if back–driving is to be avoided.

If back–driving is required, special care must be taken to align the whole system. Misalignment significantly increases the coefficient of friction by tilting and, consequently, increases the axial force required to back–drive the mechanism.

Attention:
Vertical installations and applications presenting a risk of falling loads require special care by designers and users. It is the customer's responsibility to determine the need for back–up locking devices and safety systems.

Break away torque T_x

This is the amount of torque required to overcome the following forces to start rotation:

(**a**) The total inertia of all moving parts accelerated by the source of power (including rotational and linear movements)
(**b**) The internal friction of the screw/nut assembly, bearings and associated guidance systems.

In general, the torque required to overcome inertia (**a**) is greater than the friction torque (**b**). The coefficient of friction μ_s for a high-efficiency screw, when it starts moving, is estimated to reach up to twice the amount of the practical dynamic coefficient of friction μ_{prac}, under normal operating conditions.

Driving torque T_t

This is the total torque required from the electric motor to overcome inertia, external forces, preload, friction, etc. Please see calculation formulae on **pages 111** to **113**.

Static axial stiffness R_t

The static axial stiffness of a complete roller screw assembly is the ratio of the external axial load applied to the system and the axial displacement of the face of the nut in relation to the fixed (anchored) end of the screw shaft. The inverse of the system's overall stiffness is equal to the sum of all inverted values of stiffness for each component (screw shaft, roller nut, support bearings, etc.)

Therefore, the overall stiffness of the system is always lower than the lowest value for stiffness of any individual component.

Nut stiffness R_n

When a preload is applied to a nut, the internal play is eliminated. Additionally, the squeeze load responsible for generating the preload creates initial Hertzian elastic deformation at the contact points. This leads to an increase in stiffness proportionate to the preload value.

The theoretical elastic deformation at the contact points does not take into account machining inaccuracies, actual sharing of the load between the different contact surfaces, or elasticity of the nut and screw shaft.

For this reason, two stiffness values are given in the catalogue:

- R_{ng}: This is the minimum nominal stiffness reached by any nut and roller assembly. This value, based on laboratory measurements, is a practical value and does not require any correction factor. It takes into account production tolerances, actual load sharing, preload torque tolerance, deflection of the nut body, etc. It can be used to calculate the total stiffness during the roller screw selection process.
- R_{nr}: This value corresponds to the reference nominal stiffness of a nut and roller assembly with all geometrical dimensions centered within the tolerances. It corresponds to the optimum stiffness level.

R_{nr} is always greater than R_{ng}. Both values are determined by applying an external axial load, centered on the screw shaft and equal to twice the preload force.

Shaft stiffness R_s

The elastic deformation of the screw shaft is proportional to its length and inversely proportional to the square of its root diameter.

According to the relatively low stiffness of the shaft, an increase of the nut preload (and its stiffness) will, in most cases, not increase significantly the overall stiffness of the system.

Consequently, the preload stated in the catalogue for each screw dimension is the maximum and should not be exceeded.

www.lmotion.ru lmotion-mail@ya.ru Тел.:(495) 921-34-60

Materials, heat treatment and coatings

Choice of steel material

Standard screw shafts are mainly manufactured from pre–treated 50CrMo4 (otherwise 42CrMo4) which is surface hardened by induction. Through hardened 100Cr6 bearing steel is used for nuts and rollers.

100Cr6 can also be selected for the screw shaft for operation at higher temperature up to 180 °C, or if the application presents a concern for wear.

Material properties are detailed in **table 3**.

Stainless steel can be used for all types of roller screws. For non–magnetic specifications and for high corrosion resistance requirements, nickel and cobalt based alloys can be used. Properties offered by these special steel variants are summarized in **table 2**.

Table 2

Selection of stainless steels

Steel (ISO standard)	Description	Shaft hardness [HRC]	Relative corrosion resistance
X105CrMo17	Martensitic stainless steel	58–60	**
X30Cr13	Martenstic stainless steel	50–55	***
X12CrNiMoV12–3	Carburizing stainless steel	58–60	***
X40CrMoVN16–2	Nitrogen stainless steel	58–60	****
X5CrNiCuNb16–4	Precipitation hardening stainless steel	38–45	*****
X17CrNi16–2	Martensitic stainless steel	40–45	*****
Inconel 718	Nickel base alloys	41–43	******
Alacrite 602	Cobalt base alloys	41–43	******

Table 3

Selection of standard steels

Component	Steel	Supplying state	Heat treatment	Maximum allowed operating temperature	Surface hardness at standard tempering temperature [HRC]	Customer benefits
Standard shaft	50CrMo4 or 42CrMo4	Pre–treated Tensile strength 880 to 1 030 MPa Yield strength > 650 MPa	Induction hardening	110 °C	58 to 60	Good wear resistance Resilience
Standard shaft on request	50CrMo4	Pre–treated Tensile strength 880 to 1 030 MPa Yield strength > 650 MPa	Induction hardening Higher tempering temperature	150 °C	58 to 60	Good wear resistance and medium temperature operation Resilience
Special shaft	100Cr6	Pre–treated Tensile strength 840 to 970 MPa Yield strength > 500 MPa	Induction hardening	180 °C	59 to 63	Higher wear resistance, adapted to higher operating temperature but more brittle
Nut & rollers	100Cr6	Annealed	Through hardening	180 °C	58 to 62	Good wear resistance and high temperature operation

www.lmotion.ru lmotion-mail@ya.ru Тел.:(495) 921-34-60

Effect of surface hardness on roller screw basic load rating

According to the ISO reference calculations, the load ratings provided in the catalogue are given for surface hardness above 654 HV (58 HRC). For materials or treatments resulting in a lower hardness, correction factors should be applied to the dynamic and static load carrying capacities:

$$C_{a\ corrected} = C_a \left(\frac{HV_{actual}}{654}\right)^2$$

$$C_{0a\ corrected} = C_{0a} \left(\frac{HV_{actual}}{654}\right)^3$$

Note:
654 HV is equivalent to 58 HRC

Surface coatings

SKF offers various types of surface coatings for improved roller screw performances:

- Manganese phosphate coating of carbon steels to improve corrosion resistance
- Low friction coating is available on request[1)].

Operating temperature

Operating at high temperatures will lower the steel hardness, alter the thread accuracy, may increase the oxidation of the materials and change the lubricant properties.

With operating temperature lower than –20 °C, the core resilience of the material can become critical. The lower the temperature, the more brittle the material becomes, especially with a long or thin screw shaft. Bending stresses or shock loads increase the risk of fractures.

Applications with high cycling rates and high loads can generate excessive amounts of heat. To eliminate excess heat, SKF can provide a nut mechanism, with cooling chambers. When connected to a customer supplied water circulation system, temperatures can be stabilized, enabling higher cycling rates and increased productivity.

Screw shaft buckling or column strength F_c

The column loading of a screw shaft must be checked when it is subjected to dynamic or static compression loading.

The maximum permissible compressive load is calculated using the Euler formulae, with a safety factor of 3 to 5, depending on the application. The type of shaft end mounting is critical for selecting the proper coefficient to be used in the Euler formulae.

When the screw shaft has a single diameter along its total length, the root diameter of the threaded shaft is used for the calculation. When the screw shaft comprises different sections with varying diameters, calculation becomes more complex[1)].

Through hardening treatment

1) For additional information, please contact your local SKF representative

www.lmotion.ru lmotion-mail@ya.ru Тел.:(495) 921-34-60

Shaft design

It is possible to deliver screws with one end larger than the shaft outside diameter d_1. This design feature is frequently used in conjunction with support bearings with large bore diameter.

To grind the thread efficiently, an undercut with root diameter d_2 and length l_2 is needed (→ **fig. 3** and **table 4**).

Designing the screw shaft ends

Customers designing their screw shaft ends are responsible for checking their strength against static and dynamic operating conditions.

The simple approach considers the shaft end diameters. Stress concentration factors must be used.

Zone A must be checked for strength against torsion and zone B must be checked for strength against torsion and tension (→ **fig. 4**).

Important:

Application loads reaching the basic load rating C_a generate very high mechanical stresses on the shaft ends. SKF strongly recommends that shaft ends be calculated with extreme care for such applications.

Table 4

Type of roller screw	Design conditions	Value for l_2
SR, BR, PR, HR, SRR	$d_3 \leq 1{,}85\ d_1$ Lead $P_h \leq 8$ mm	$l_2 \geq 12$ mm
	$d_3 \leq 1{,}85\ d_1$ Lead $P_h > 8$ mm	$l_2 \geq 1{,}4\ P_h$
SV, BV, PV	$d_3 \leq 1{,}85\ d_1$ Lead $P_h = 1$ mm	$l_2 \geq 12$ mm
	$d_3 \leq 1{,}85\ d_1$ Sizes $d_0\ P_h = 40 \times 2$ or 50×2 or 63×2 mm	$l_2 \geq 12$ mm
	$d_3 \leq 1{,}85\ d_1$ All other types of recirculating roller screws	$l_2 \geq 14$ mm
All types of roller screws	$d_3 > 1{,}85\ d_1$	Please contact your local SKF representative

Fig. 3

Shaft design with shoulder

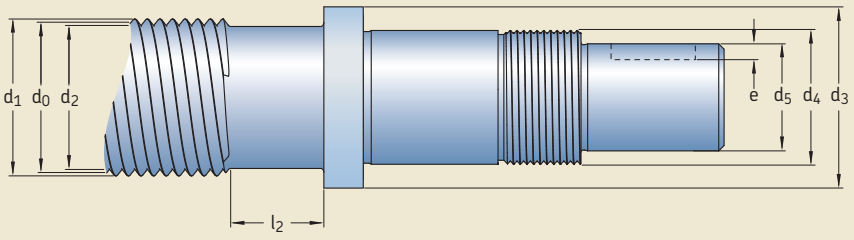

Fig. 4

Shaft end with support bearing

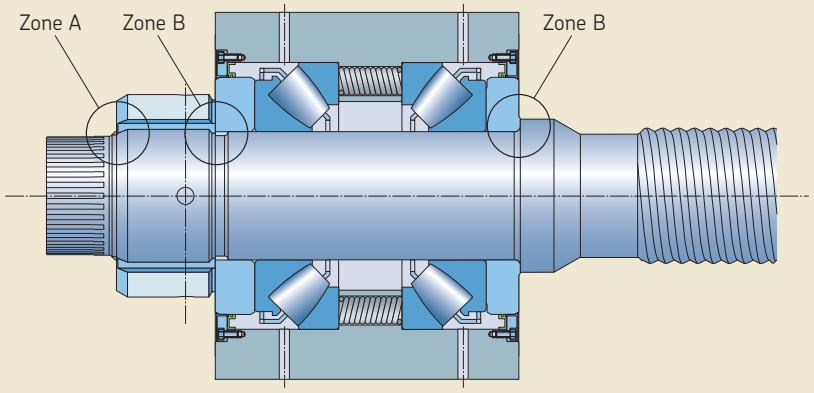

www.lmotion.ru lmotion-mail@ya.ru Тел.:(495) 921-34-60

Zone A: Torsion only

The nominal shear stress τ caused by the input torque τ is given by:

$$\tau = \frac{16\,000\,T}{\pi\, d_5^3}$$

This value is increased by a stress concentration factor f_4 to give the real shear stress τ_p

$$\tau_p = f_4\,\tau$$

According to von Mises, the total stress σ_t

$$\sigma_t = 1{,}73\,\tau_p$$

For safety, σ_t should be less than 67% of the yield strength.

If the end diameter d_5 includes a keyway of depth e, calculate using $(d_5 - e)$ instead of d_5.

The angle of twist of the screw shaft is given by

$$\theta = \frac{7{,}48\;T\,l}{d_0^4}$$

where
l = length between motor and nut

The linear positioning error, δ, caused by this twist is

$$\delta = \frac{P_h\,\theta}{360}$$

Note:
Stress concentration factors f_4 and f_5 are available in all general mechanical literature.

Units:
d: mm
τ: N/mm² [MPa]
σ: N/mm² [MPa]
θ: degree [°]
δ: mm
F: N

Zone B: Axial + torsional stresses

The nominal axial stress caused by the axial load F is given by

$$\sigma = \frac{4\,F}{\pi\, d_4^2}$$

This value is increased by a stress concentration factor f_5 to give the real principal stress σ_p

$$\sigma_p = f_5\,\sigma$$

As for zone A calculation

$$\tau_p = f_4\,\tau$$

According to von Mises, the total stress σ_t

$$\sigma_t = (\sigma_p^2 + 3\,\tau_p^2)^{1/2}$$

For safety, σ_t should be less than 67% of the yield strengh.

Product inspection and certification

Standard or special inspection reports or certificates can be provided on request. The following reports can be supplied with roller screws:

1 Conformity with customer specifications (fl. EN 10204)
2 Conformity with catalogue specifications (fl. EN 10204)
3 List of manufacturing and control operations
4 Preload torque curve or internal friction torque curve
5 Lead precision curve
6 Matching of travel deviation
7 Stiffness curve
8 Raw material chemical analysis
9 Magnetic particle inspection
10 Through hardening heat treatment
11 Induction hardening
12 Carburizing hardening
13 Surface treatment
14 Report for specific dimensions
15 FAIR (First Article Inspection Report) EN9102

Working environment

As a stand–alone component, the roller screws cannot be ATEX certified.

Consequently, SKF does not recommend the use of roller screws in explosive environments.

www.lmotion.ru lmotion-mail@ya.ru Тел.:(495) 921-34-60

Lubrication

Lubrication for roller screws

The primary objectives of lubrication are:

- To prevent metal–to–metal contact between the rolling surfaces, and to minimize metal fatigue
- To protect against corrosion
- To minimize wear
- To maximize the roller screw service life
- To achieve performance requirements for given operational conditions (temperature, humidity, vacuum environment, corrosive environment, etc.)

In standard delivery conditions, roller screws are not lubricated. However, they can be lubricated on request. Please contact your local SKF representative. For roller screws with standard delivery conditions, customers must provide proper lubrication prior to operation.

Important:
Before shipping, roller screws are coated with a rust inhibitor. The inhibitor is not a lubricant. Depending on the lubricant selected for the application, it may be necessary to remove the rust inhibitor before applying the lubricant in order to eliminate any risk of incompatibility. To remove the film, SKF recommends the following procedure:

- Wash the roller screw assembly with a solvent
- Allow the solvent to penetrate the nut assembly
- Let the solvent drain completely from the roller screw assembly

The rust inhibitor SKF applies to its roller screws is not compatible with the following lubricants:

- Polyglycol base oil
- Ester base oil
- Silicone base oil
- Aluminum complex soap

If any of the above lubricants are used, please follow the procedure above to remove the rust inhibitor prior to lubrication.

There are three main types of lubricants, grease, oil and dry lubricant. In the majority of applications, grease or oil lubrication will be selected. Due to similar tribological conditions, most greases or oils recommended for gears and bearings are also suitable for roller screw lubrication (→ **table 5**).

Table 5

Different lubricant pros and cons

Type of lubricant	User benefits	Constraints
Grease	Most practical and most usual lubrication solution for roller screws	Requires relubrication schedule
Oil	Higher lubrication performance for roller screws Circulating oil helps to clean the roller screw mechanism and stabilize the operating temperature	Requires more complex equipment installation Special care required for equipment cleanliness and tightness
Dry coating	Lubrication solution for specific applications or environments where liquid lubricants cannot be used	Requires advanced processing method Might require special steel variants for roller screws Higher cost Well defined operating conditions to achieve expected performance

www.lmotion.ru lmotion-mail@ya.ru Тел.:(495) 921-34-60

Grease lubrication

Grease is the most common lubricant for screws. The grease type is primarily selected based on the requirements for operating temperature, load level, speed and environment.

Grease consists of base oil (average 80% of total grease volume) which is the lubricating agent, contained in a thickener matrix or soap, plus additives which provide special properties.

Grease selection

Grease with a synthetic base oil is recommended over grease with a mineral base oil as it presents the advantages of greater stability over time and lower viscosity variation with changes of temperature.

The following synthetic oils provide good results for roller screw applications:

- Polyalphaolefins (PAO)
- Polyglycol (PAG)

Among many possible alternatives, the following thickeners achieve a good result with roller screw applications:

- Lithium or complex lithium
- Barium or complex barium

The dynamic viscosity characterizes the oil's ability to create a sufficiently thick hydrodynamic film between the contact surfaces of a screw. Lubricant data sheets usually provide the viscosity of the base oil at 40 °C and 100 °C.

In general, SKF recommends lubricants with a viscosity around 100 Cst when the application has reached its normal operating temperature.

Normal operating temperature is determined by the heat generated by the roller screw, any externally applied heat and the amount of heat that can be transferred away from the screw.

Grease consistency or NLGI grade between 0 (semi–fluid) and 2 (soft) is suitable for most applications. For automatic lubrication systems, SKF recommends checking the consistency required for the system to work properly.

For high speed applications and vertical applications which could cause the lubricant to fly off or pour down the shaft because of centrifugal forces, lubricants that will strongly adhere to the shaft are recommended. In this respect, barium soap and complex metallic soaps provide good adhesive properties. In these conditions, NLGI grade 2 is also recommended to provide good consistency.

However, when rotating speed is low (below 10 r/min), high viscosity lubricants are recommended to enable the creation of a sufficiently thick hydrodynamic film between the rolling surfaces, and to limit friction under load. SKF usually recommends a viscosity above 300 Cst at the operating temperature.

Shearing of the hydrodynamic lubricant film is proportional to the load level. In general, for external load levels greater than 25% of the dynamic load carrying capacity of roller screws, SKF recommends greases with extreme pressure (EP) additives.

Greases that pass the "four balls welding load test" under a weight of 250 kg, will perform well in heavily loaded applications.

The following working conditions require specific greases:

- Food industry
- Vacuum applications
- Presence of water
- Vibrations
- Small movements, oscillations...

SKF lubrication systems can be adapted to most roller screws for automatic injection of grease.

Lubrication schedule and procedure

SKF recommends the following lubrication schedule and procedure:

1 Commissioning and initial lubrication
New roller screws must be lubricated prior to use.

1.1 Lubrication procedure for the shaft: On the threaded length of the shaft, spread a volume of grease with a brush. The product tables (**pages 52** to **101**) provide the quantity of grease Z_s to be applied per meter of threaded length for each screw size.

This volume of grease is estimated using the following formula:

$$Z_s = 4{,}4 \times 10^{-4}\, d_0\, l_1$$

where

Z_s = grease volume [cm^3]
d_0 = nominal diameter of the screw [mm]
l_1 = threaded length of the screw [mm]

1.2 Lubrication procedure for the nut: Roller screws with a flanged nut have a threaded hole for a grease fitting. Roller screws with a cylindrical nut include a central groove and a lubrication hole that can be connected to a grease channel through the housing. During the initial lubrication, SKF recommends filling 1/3 rd of the free space in the nut with grease. The volume of grease to be injected is listed in the product tables in column Z_n.

Inject the grease in several steps, rotate the nut on the shaft or the shaft in the nut (several revolutions) between two grease injections in order to spread the grease between the rollers and to spread it over the nut length.

2 First relubrication
For non–preloaded screws, SKF recommends an additional injection volume of $Z_n/2$ after 100 000 revolutions.

www.lmotion.ru lmotion-mail@ya.ru Тел.:(495) 921-34-60

3 Lubrication maintenance schedule (after the first relubrication)

The following method describes the lubrication maintenance schedule and procedure for complete grease renewal, to be followed for the life of the roller screw, after the initial greasing operation and the first relubrication. This recommendation will optimize performance and extend the service life of the roller screw. This method is valid for screws working in an industrial environment, in a workshop, without external contaminants, and at ambient temperature not exceeding 40 °C.

A lubricant that does not completely meet the application requirements will require shorter relubrication intervals.

To avoid problems associated with grease compatibility (miscibility), always use the same type of grease. If, for whatever reason, it is necessary to switch to a different type of grease, check miscibility carefully.

When in doubt, thoroughly clean the nut and screw shaft.

Note:
Grease applied to the length of the screw thread is usually not protected, which can accelerate aging and oxidation.

The parameters determining the relubrication intervals are:

- Speed: maximum rotational speed of the application
- Load: mean axial load carried by the screw in the application. The mean load can be calculated using the formulae detailed in **pages 111** to **113**
- Temperature: internal temperature of the nut mechanism, usually the temperature measured on the outside surface of the nut, plus 15 °C.

If idle time is very long compared to operational time, the natural ageing and oxidation of the grease tends to change the grease condition, and decrease relubrication intervals. This case is not in the scope of following method.

The initial quantity of grease is the volume spread on the shaft plus the volume injected in the nut.

$$Z_o = Z_s + Z_n$$

The calculation of the lubrication intervals takes into account the actual operational time when the screw is in motion (idle time is not factored into that calculation).

The time before renewal of the initial quantity of grease is:

$$t_g = t_s K_T K_F$$

where

t_g = Operational time before complete renewal of the initial quantity of grease
t_s = Basic relubrication interval related to maximum speed. K_S can be estimated using **diagram 4**
K_T = Correction factor related to roller screw maximum internal operating temperature. K_T can be estimated using **diagram 5**. This diagram applies to standard greases such as lithium based greases
K_F = Correction factor related to screw mean operating load. K_F can be estimated using **diagram 6**, with consideration to the ratio of equivalent dynamic load to dynamic load carrying capacity F_m/C_a.

Important:
The renewal of grease should be done incrementally. Once the relubrication quantity and total interval are determined, they must be fractioned over time in practical volume and intervals. SKF recommends applying small amounts of grease frequently rather than applying the full quantity in one operation.

If all the grease is renewed at once (which is not recommended), operate the roller screw at low speed to spread the grease over the full length of the screw.

If the consistency or viscosity of the grease changes rapidly, or if the temperature does not stabilize to an acceptable level, either the relubrication intervals must be shortened, or the grease is not suitable for the application conditions and another type of grease must be used.

Always rotate the shaft during periodic lubrication to distribute the grease evenly in the nut and the shaft. Rotating the shaft also prevents a roller from blocking the grease inlet hole.

www.lmotion.ru lmotion-mail@ya.ru Тел.:(495) 921-34-60

Diagram 4

Basic relubrication interval t_s as a function of
- rotating speed [r/min]
- operational time [hours]
- nominal diameter d_0 [mm]

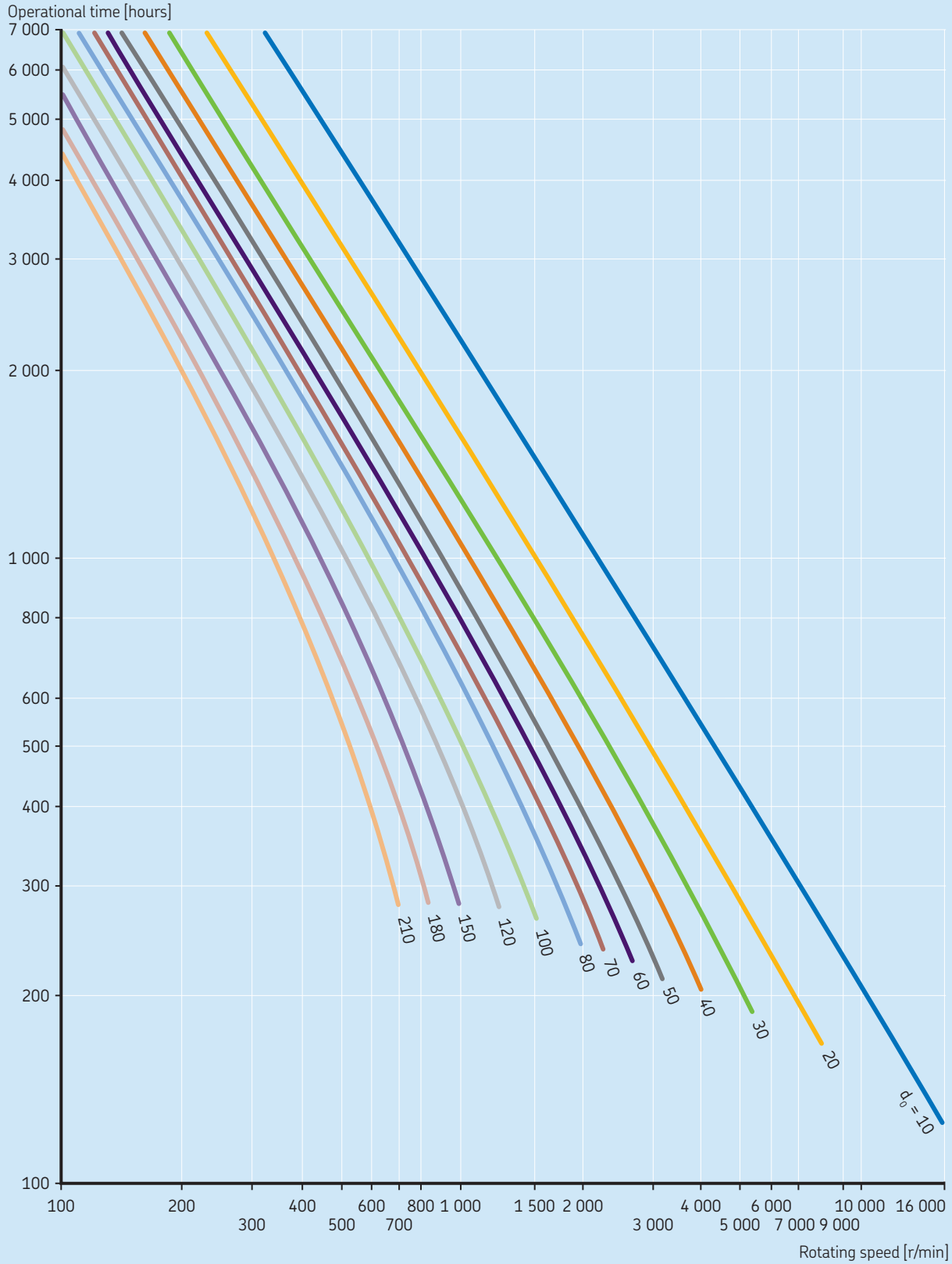

www.lmotion.ru lmotion-mail@ya.ru Тел.:(495) 921-34-60

Diagram 5

Correction factor K_T for operating temperature

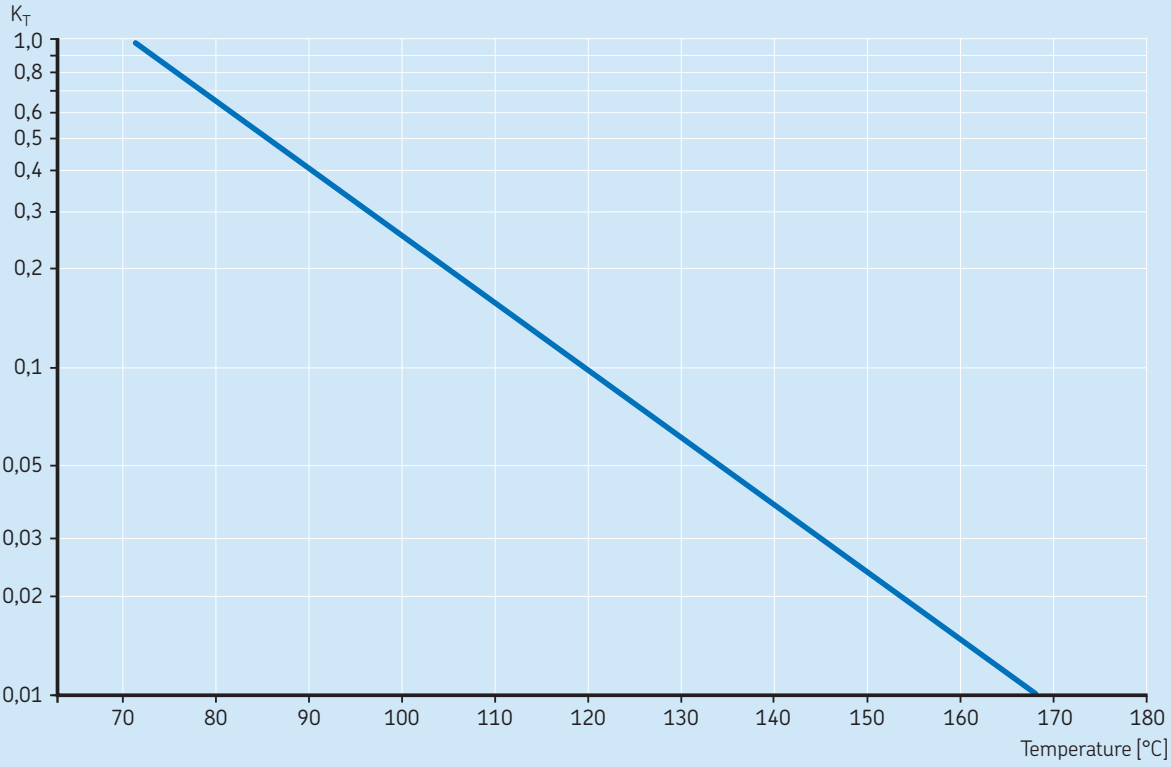

Diagram 6

Correction factor K_F for mean operating load

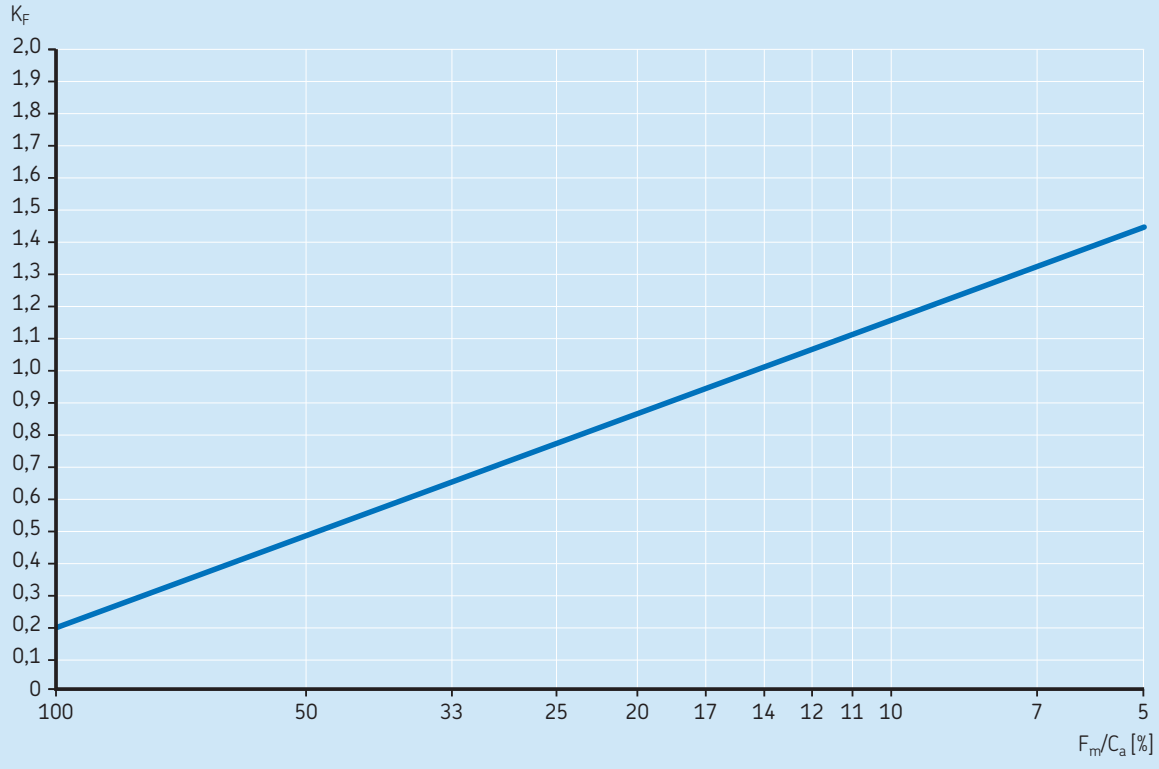

www.lmotion.ru lmotion-mail@ya.ru Тел.:(495) 921-34-60

Example:
Roller screw SRF 39 × 20R 760/1030 G5 Z WPR is used in a simulator, in the vertical position, and operates according to following conditions:

- Mean axial load over one working cycle = 17 kN
- Each working cycle accomplishes 32 back-and-forth strokes of 1 000 mm (total travel of 32 000 mm per working cycle), operation is 12 working cycles per hour, 8 hours per day
- The screw is in motion during 70% of the time of a working cycle, i.e. 5,6 hours of motion per day
- Maximum speed = 1 500 r/min

For such application data, a grease with metallic complex soap or barium is recommende because it will improve adhesion under high speed and vertical position. A viscosity of 100 to 150 Cst at 40 °C is advised.

Initial quantity of grease when commissioning the screw

- Initial quantity of grease on the shaft
  $Z_s = 4,4 \times 10^{-4}\ d_0\ l_1$
  $= 4,4 \times 10^{-4} \times 39 \times 760$
  $= 13\ cm^3$ (**see product table**)
- Initial quantity of grease in the nut
  $Z_n = 28\ cm^3$ (**see product table**)
- Total quantity of grease
  $= 13 + 28 = 41\ cm^3$ must be applied

Calculation of first relubrication

- With the given duty cycle, 100 000 revolutions are reached within one day
- (32 000 / 20) = 1 600 revolutions per working cycle
- 12 cycles per hour ⇒ 19 200 revolutions per hour
- 8 hours operation per day ⇒ 153 600 revolutions per day
- Approximately 1 day into operation, the first relubrication should be scheduled with 14 cm^3 of new grease in the nut (half the initial volume of grease in the nut).

Calculation of lubrication maintenance schedule

- t_s:
Maximum speed = 1 500 r/min
From **diagram 7**, with 1 500 r/min and d_0 = 39 mm ⇒ K_S = 680 hours

- K_T:
The temperature measured on the nut external surface = 65 °C
⇒ Internal screw nut temperature ≈ 80 °C
From **diagram 8** ⇒ K_T = 0,65

- K_F:
Dynamic load carrying capacity C_a of SRF 39 × 20R = 172 kN
F_m / C_a = 17 / 172 ≈ 10%
From **diagram 9** ⇒ K_F = 1,15

- Therefore, the maintenance lubrication schedule is:

$t_g = t_s\ K_T\ K_F$
$= 680 \times 1,15 \times 0,65$
$= 508$ hours
$= 90$ working days (508 / 5,6 ≈ 90)

Within a period of 90 days, 41 cm^3 of new grease must be applied, to be divided in fractions applied on a regular basis.

Diagram 7

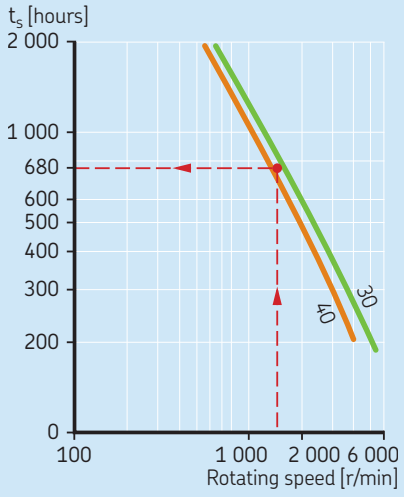

Diagram 8

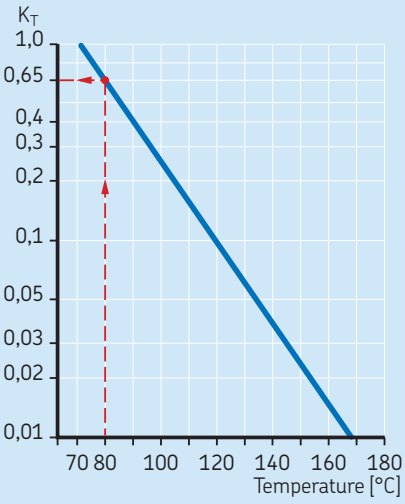

Diagram 9

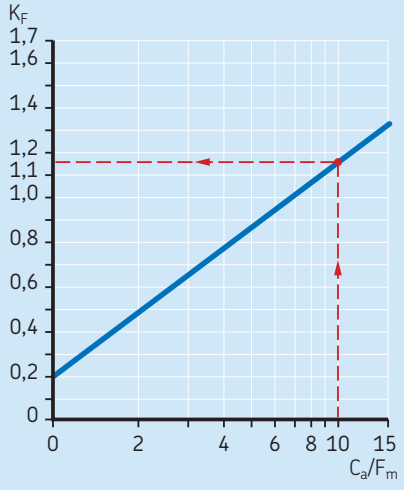

www.lmotion.ru lmotion-mail@ya.ru Тел.:(495) 921-34-60

Oil lubrication

Oil lubrication provides the following advantages over grease lubrication.

Oil dissipates heat more efficiently than grease, particularly when there are heavy duty cycles and/or high speeds.

It helps to remove contaminants, and helps to clean the roller screw nut.

Lubricating a roller screw with oil is normally accomplished using a centralized recirculating oil system. This type of system is ideal because it continuously replaces the oil in the nut with cooled filtered oil coming from the reservoir. This system is recommended to control the flow of lubricant, remove any contaminants and avoid overheating.

Oil selection

Oils used to lubricate other rotating parts such as bearings and especially gears can also be used to lubricate roller screws. Using hydraulic oils will jeopardize the product performance, condition and life.

The oil performance is affected by the rotational speed, the operating temperature and the load level.

The oil should have a viscosity of 100 Cst at the operating temperature. At low speed (below 10 r/min), the viscosity should be ≈ 300 Cst at the operating temperature.

EP additives are recommended to improve the oil film strength.

Corrosion resistant and stabilizing additives are also recommended. Synthetic oils (PAO, polyglycol or ester based) are recommended for long service life and stable operation at high temperatures.

Oil quantity

The quantity to be injected will depend on the size of the roller screw, the speed, the duty cycle and the sealing efficiency of the wipers. It can vary from 0,5 to 100 cm^3/hour, with small injections of 0,1 to 1 cm^3. It is best to adjust, by experience, the oil flow to obtain the correct stabilization temperature.

Wipers

Wipers are composite components fitted at the ends of the nut with the purpose of preventing contamination and keeping the lubricant in place. Wipers are important components for roller screw performance and service life. It should be noted that standard wipers perform like labyrinth seals, not like garter seals. Depending on the product assortment, wipers are standard or optional (→ **fig. 5**).
Standard wipers are manufactured from acetyl resin with continuous operating temperature up to 110 °C and peak temperature up to 140 °C (→ **tables 6** and **7**).

Important:
Normally, threaded wipers are not axially secured in the nut. If the maximum stroke position is not respected and the edge of wiper extends beyond the non–threaded portion of the screw, the wiper can disengage from the nut or potentially jam. For this reason, the user shall respect the maximum stroke position.

On request, wipers can be axially secured to a nut to prevent disengagement of the wipers during operation.

Dry lubricants

When wet lubrication is not allowed or not effective (application examples: satellites, laboratories), dry lubricants present the following advantages:

- Low out-gassing (for example, satellite applications)
- Coefficient of friction independent of speed and temperature
- Positional stability
- Low rate of ageing (for example, during long storage periods)

Dry lubricants can be applied by projection, electrolytic deposit or physical vapour deposit.

SKF recommends thin deposits that will support a low coefficient of friction: these dry lubricants are usually based on PTFE, MoS2, WS2, graphite. These coatings are not corrosion resistant, and special care must be taken when selecting raw materials.

SKF also recommends thin deposits that enhance the resistance to wear. Such dry lubricants are typically based on tungsten carbide, Diamond Like Carbon or chrome plating. They do not provide the low coefficient of friction of PTFE for example.

Dry lubricants (on a stand-alone basis) are not suitable for industrial grade or for heavy duty applications, and they cannot reach the rolling fatigue life achieved with grease or oil lubrication.

Note:
Lubrication that is performed at the customer facility after product delivery is outside the control of SKF. However, SKF provides the above guidelines to aid the customer in selecting a lubricant, and proper maintenance to provide maximum performance and product life. For additional information about lubricants and lubrication systems, please contact your local SKF representative.

Fig. 5

Wiper

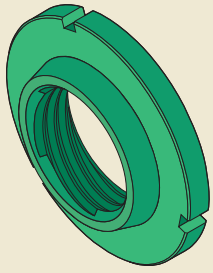

www.lmotion.ru lmotion-mail@ya.ru Тел.:(495) 921-34-60

Table 6

Standard wipers

Roller screw types	Wipers in standard delivery (Acetyl resin material)
Planetary SR/BR/PR	To be specified in the designation
Planetary Ultra Power HR	Included
Planetary IR (inverted)	Not included and not an option (wipers cannot be fitted into this roller screw design, sealing can be integrated into the push tube)
Planetary SRR (rotating nut)	Included (wipers fitted in the roller screw nut, garter seals fitted in the bearings housing)
Recirculating SV/BV/PV	To be specified in the designation

Table 7

Special wipers

Optional wiper design	Application
PTFE material	High operating temperatures: continuous temperature up to 200 °C, peak temperature up to 260 °C
Tighter wiper	Higher resistance to contaminants and better lubricant retention inside the nut
Split (two half moons)	Easier wiper disassembly on long, large diameter screws

www.lmotion.ru lmotion-mail@ya.ru Тел.:(495) 921-34-60

Axial play and preload

Axial play and preload

Standard roller screws are manufactured with axial play which varies between 0,02 mm and a maximum of 0,1 mm, depending on product size.

Roller screws can be manufactured without backlash or with preload (→ **table 8**).

For optimum stiffness and positioning accuracy during reversal of loading direction, or during operation with low external load, internally preloaded nuts are recommended. Under these conditions, preloaded nuts exhibit a much lower axial deflection and much higher stiffness than non–preloaded nuts.

All preloaded roller screws (PR and PV types) are run in before delivery to the customer. This process stabilizes preload and stiffness and virtually eliminates backlash over the service life of the screw.

Table 8

Nut type

Prefix	Internal nut design
SR	Planetary roller screw with axial play
BR	Planetary roller screw without backlash
PR	Planetary roller screw with preloaded split nut
PRM	Planetary roller screw with preloaded double nut
SV	Recirculating roller screw with axial play
BV	Recirculating roller screw without backlash
PV	Recirculating roller screw with preloaded split nut
PVM	Recirculating roller screw with preloaded double nut

Preload and stiffness

Typical load/deflection curves for four different nut designs are shown in **diagram 10**:

- Curve #1: Single nut with axial play
- Curve #2: Single nut without backlash
- Curve #3: Preloaded split nut
- Curve #4: Preloaded double nut

Diagram 10

Load/deflexion curve for different nut types

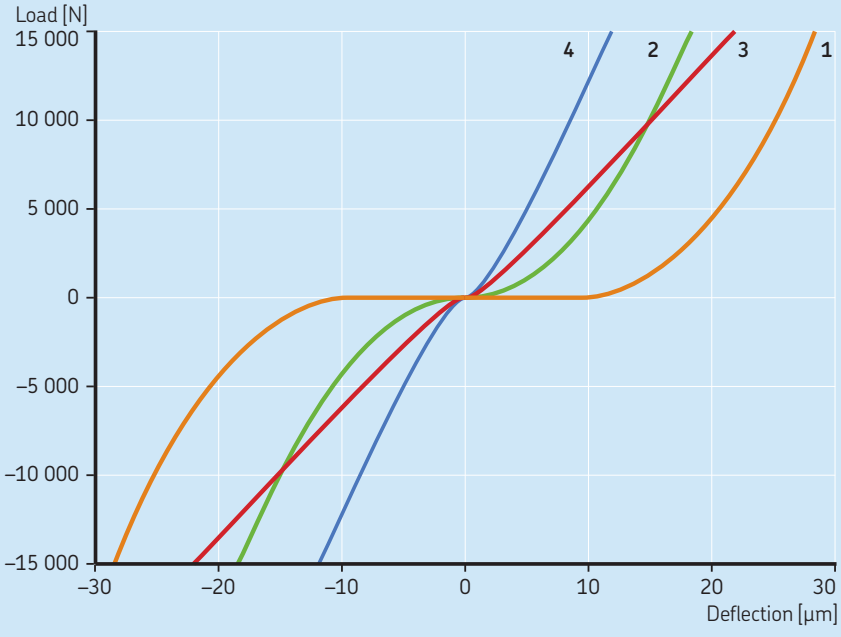

www.lmotion.ru lmotion-mail@ya.ru Тел.:(495) 921-34-60

The effect of the internal preload in a split nut is shown in **figure 6**. A squeeze load F_q is applied to the two halves of a split nut. With a precisely ground and calibrated spacer, this squeeze load F_q generates the internal preload force F_{pr}.

The application of an external load F on a preloaded split nut results in different load values on each half of the nut (→ **fig. 7**).

The relative load distribution on the two halves of the preloaded split nut can be described by the **figure 8**:

- At point A: without external load F, the two nut halves are in equilibrium under preload F_{pr} (→ **fig. 6**)
- At point B: with external load F applied to nut half #2 (→ **fig. 7**), the axial force taken by nut half #2 increases to value F_2, and the preload of nut half #1 is reduced to value F_1. For all situations where $F \leq 2{,}83\ F_{pr}$, the load seen by nut half #2 is greater than the external load. Therefore, increasing the preload would reduce the life of the screw
- At point C, where external load $F = 2{,}83\ F_{pr}$, the axial load taken by nut half #2 is equal to F. At this point, nut half #1 becomes unloaded
- At point D, with $F = 2{,}83\ F_{pr}$ applied to nut half #1, nut half #2 becomes unloaded.

For a given system, the level of the preload force F_{pr} corresponds to a few percentage points of its dynamic load carrying capacity C_a.

With a preloaded split nut design, the external load is taken by one of the two nut halves for a given external load direction. Under high loads, the load carrying capacity and maximum stiffness level of a preloaded split nut are substantially lower than for a one-piece nut. Under low load conditions, a preloaded split nut eliminates backlash and increases the degree of stiffness.

Fig. 6

Preload in a split nut without external load

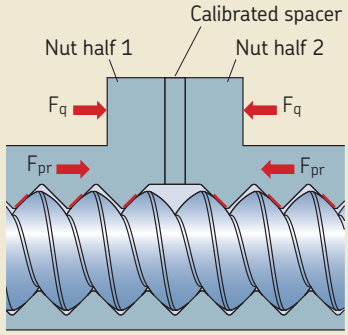

Fig. 7

Preloaded split nut with external force

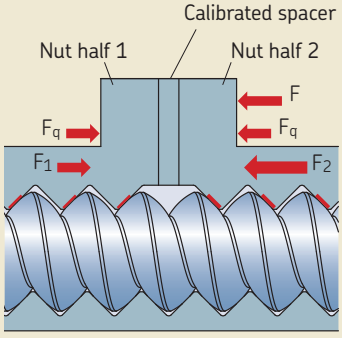

Running in bench

Preload torque test bench

Fig. 8

Concept of preloaded nut

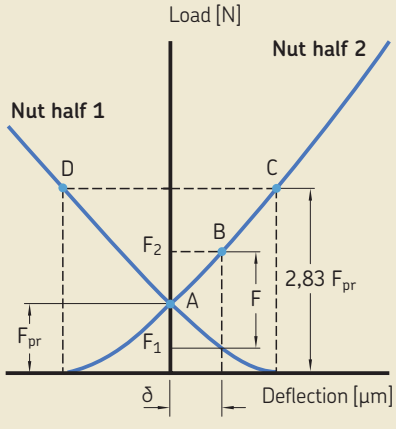

www.lmotion.ru lmotion-mail@ya.ru Тел.:(495) 921-34-60

Because of the very high load capacity and stiffness of roller screws, a split nut usually offers sufficient capacity for most applications and offers an extremely compact design.

In exceptional cases where the load rating of a preloaded split nut is not sufficient, two single nuts may be preloaded together (→ **fig. 9**). Exact dimensions are available on request by contacting SKF.

Fig. 9

Double nut with preload

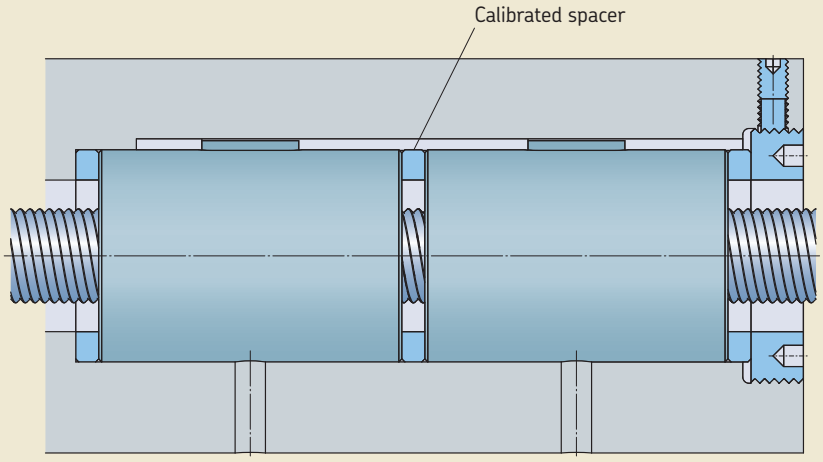

Preload torque T_{pr}

Preload torque T_{pr} is the friction torque resulting from the sole preload force F_{pr}, and is calculated considering the practical efficiency of the selected screw (see calculation formulae **pages 111** to **112**).

Preload torque tolerances

For preloaded roller screws, an optimum preload torque T_{pr} has been calculated and is provided in the product tables.

These values correspond to a compromise between the stiffness level and the preload force applied. A higher preload torque would penalize the driving torque, potentially decrease the product life and could generate additional heat, whereas a lower preload torque would decrease the level of stiffness. For specific cases where a different preload torque is required, please contact your local SKF representative.

The variation tolerance of preload torque along a screw shaft depends on:

- The helix angle of the screw thread
- The slenderness of the screw shaft (i.e. the ratio l_1/d_0 of threaded length over nominal diameter)
- The lead precision
- The preload torque range.

Tables 9 and **10** give the tolerances for preload torque variation, with screw thread helix angle less than 11°, and greater than 11° respectively.

Preload torque is measured at 50 r/min with ISO 68 oil grade for BR and PR screw types and with ISO 220 oil grade for BV and PV screw types.

Note:
The helix angle a can be calculated using formulae in **page 112**.

www.lmotion.ru lmotion-mail@ya.ru Тел.:(495) 921-34-60

Example:
Screw PRU 39 × 5R 433/780 G3 WPR has been selected.

According to the information in the product tables, the preload torque is T_{pr} = 1,3 Nm. What is the tolerance of preload torque for G3 lead precision?

The helix angle is 2,34° and the threaded length is 433 mm (l_1/d_0 = 11,1 < 40). **Table 9** gives a variation tolerance of ± 20% for G3. All screws will exhibit a friction torque of 1,3 Nm ± 20% or 1,04 to 1,56 Nm.

The corresponding minimum nominal nut stiffness is R_{ng} = 750 N/µm, and the nominal reference nut stiffness is R_{nr} = 980 N/µm.

Diagram 11 presents the above calculated ranges and a typical torque variation measurement. Preload torque or internal friction torque certificates can be supplied on request.

Table 9

Tolerance of preload torque for screws with α < 11°

T_{pr} over	incl.	G1	G3	G5	G1	G3	G5
		$l_1/d_0 \leq 40$ and $l_1 \leq 4\,000$			$l_1/d_0 \leq 60$ and $l_1 \leq 4\,000$		
Nm		±%					
0	**0,2**	35	40	50	40	50	60
0,2	**0,6**	25	30	35	30	35	40
0,6	**1,0**	20	25	30	25	30	35
1,0	**2,5**	15	20	25	20	25	30
2,5	**6,3**	10	15	20	15	20	25
6,3	**10,0**	10	10	15	15	15	20

Table 10

Tolerance of preload torque for screws with α ≥ 11°

T_{pr} over	incl.	G3	G5	G3	G5
		$l_1 \leq 2\,000$		$2\,000 \leq l_1 \leq 4\,000$	
Nm		±%			
0	**10,0**	70	80	80	90

Planetary roller screws preloaded for optimum stiffness with α ≥ 11° are not available with G1 lead precision

Diagram 11

Preload torque measurement graph

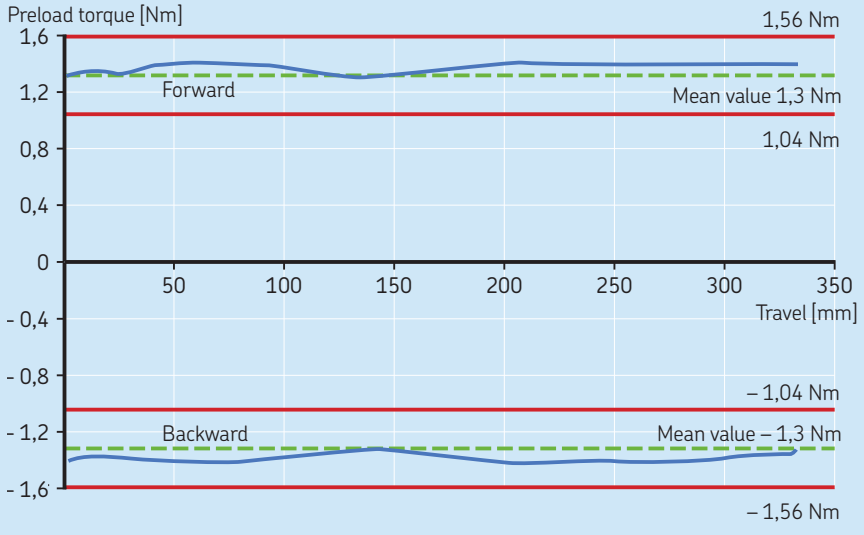

Example of measurement record for a PRU 39 × 5R 433/780 G3 WPR

www.lmotion.ru lmotion-mail@ya.ru Тел.:(495) 921-34-60

Preload adjustment

Cylindrical nuts

For cylindrical nuts with preload, the stoppers threaded into the housing must be tightened according to the torque values listed in **table 11** for PRU planetary roller screws (→ **fig. 12**), and in **table 12** for PVU recirculating roller screws (→ **fig. 13**).

Note that torque values in **tables 11** and **12** also apply to single piece nuts such as SRC/BRC (→ **fig. 10**) and SVC/BVC (→ **fig. 11**) nut types respectively.

Standard nuts are made of bearing steel hardened to 58 to 62 HRC. Under certain load conditions, it is necessary to use hardened and ground spacers to avoid imbedding the nut side face into the housing shoulder and into the stopper clamping area. This precautionary measure will diminish the risk that preload and stiffness are reduced.

Flanged nuts

For flanged nuts with preload, the fixing bolts must be tightened according to the torque values listed in **table 13** for PRK planetary roller screws and PVK recirculating roller screws (→ **fig. 14**).

Fig. 10

SRC/BRC

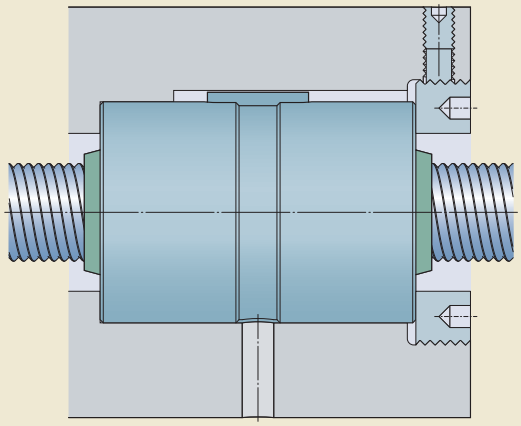

Fig. 11

SVC/BVC

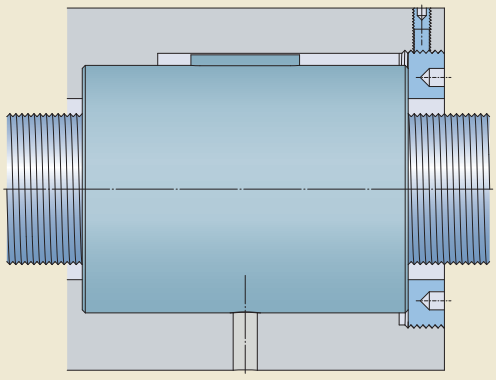

Fig. 12

PRU

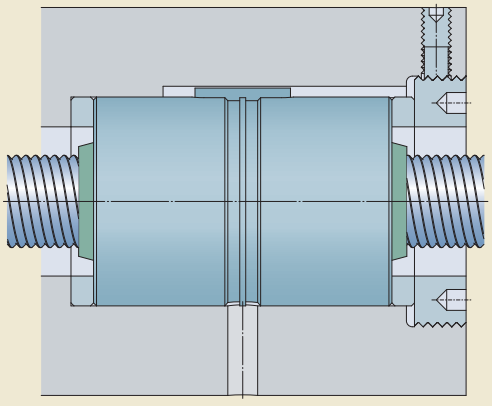

Fig. 13

PVU

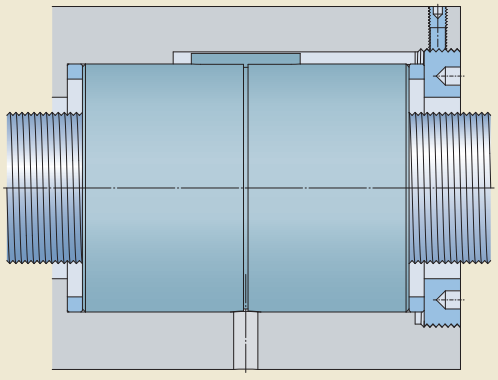

www.lmotion.ru lmotion-mail@ya.ru Тел.:(495) 921-34-60

Table 11

SRC/BRC/PRU

Nominal diameter d_0	Housing stopper thread	Tightening torque	Squeeze load
mm		Nm	N
8	30 M1,0	20	2 700
12	35 M1,0	35	4 100
15	40 M1,0	45	4 600
21	50 M1,0	65	5 500
25	60 M1,0	80	5 500
30	70 M1,5	100	5 900
39	90 M1,5	140	6 400
44	88 M1,5	160	7 600
48	110 M1,5	180	6 800
60	130 M2,0	230	7 400
64	125 M2,0	250	8 300
75	158 M2,0	310	8 200
80	148 M2,0	340	9 600
99	215 M2,5	440	8 500
120	230 M2,5	550	9 950
150	340 M2,5	730	8 950

Table 12

SVC/BVC/PVU

Nominal diameter d_1	Housing stopper thread	Tightening torque	Squeeze load
mm		Nm	N
8	25 M1,0	20	3 250
10	27 M1,0	27	4 000
12	30 M1,0	35	4 800
16	35 M1,0	48	5 600
20	40 M1,0	62	6 400
25	47 M1,0	82	7 200
32	60 M1,0	110	7 600
40	75 M1,5	145	8 000
50	87 M1,5	300	9 000
63	108 M2,0	300	9 600
80	146 M2,0	335	9 500
100	185 M2,5	440	9 900
125	230 M2,5	580	10 000

Table 13

PRK/PVK

Nominal diameter d_0	Number of screws	Screw size	Tightening torque
mm			Nm
8	6	M4	3
10	6	M4	3
12	6	M4	3
15	6	M5	6
16	6	M4	3
20	6	M5	6
21	6	M5	6
25 (PRK)	6	M6	10
25 (PVK)	6	M5	6
30	6	M8	25
32	6	M6	10
36	6	M8	25
39	6	M10	50
40	6	M8	25
44	6	M10	50
48	6	M12	80
50	6	M10	50
56	6	M12	80
60	6	M16	200
63	6	M12	80
64	6	M16	200
80	8	M16	200
100	12	M16	200
125	12	M18	270

Fig. 14

PVK

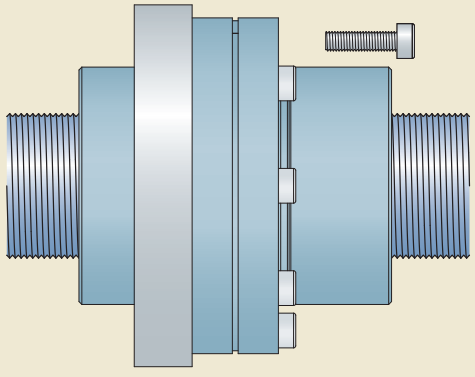

www.lmotion.ru lmotion-mail@ya.ru Тел.:(495) 921-34-60

Lead precision and manufacturing tolerances

Lead precision

Generally speaking, the precision indicated defines the lead precision class that complies with ISO 3408–3, e.g. G1, G3 and G5 (→ **tables 14** and **15**).

Standard lead precision is G5. On request, SKF can deliver roller screws with G3 or G1 lead precision.

A roller screw lead precision class is primarily defined by the maximum permitted travel variation V_{300p} over a threaded length of 300 mm (→ **table 14**).

Lead precision characteristics are defined by the permitted lead error e_p, and the permitted travel variation V_{up}, measured at 20 °C over the useful stroke l_u (→ **tables 15**, **16** and **fig. 15**).

Some customer applications require a travel compensation c to account for the effect of operating temperature on the lead precision: a temperature variation by 1 °C results in dimensional change of 11,5 µm/m of screw shaft length. Consequently, if needed, a travel compensation c can be achieved.

- Standard case with c = 0 (→ **fig. 16**)
- Case with customer specific value of c (→ **fig. 17**)

Lead precision graphs can be supplied on request.

Table 14

Maximum permitted travel variation over 300 mm

G1 V_{300p}	G3 V_{300p}	G5 V_{300p}
µm		
6	12	23

Table 15

Travel deviation and maximum permitted travel variation over the useful travel l_u

l_u over	l_u incl.	G1 e_p	G1 v_{up}	G3 e_p	G3 v_{up}	G5 e_p	G5 v_{up}
mm		µm					
0	**315**	6	6	12	12	23	23
315	**400**	7	6	13	12	25	25
400	**500**	8	7	15	13	27	26
500	**630**	9	7	16	14	32	29
630	**800**	10	8	18	16	36	31
800	**1 000**	11	9	21	17	40	34
1 000	**1 250**	13	10	24	19	47	39
1 250	**1 600**	15	11	29	22	55	44
1 600	**2 000**	18	13	35	25	65	51
2 000	**2 500**	22	15	41	29	78	59
2 500	**3 150**	26	17	50	34	96	69
3 150	**4 000**	32	21	62	41	115	82
4 000	**5 000**			76	49	140	99
5 000	**6 300**					170	119

Table 16

Useful travel

Type of roller screw	**Useful travel** l_u = threaded length – 2 l_e where
Planetary roller screw	l_e = 1 × lead
Recirculating roller screw	l_e = 5 × lead

www.lmotion.ru lmotion-mail@ya.ru Тел.:(495) 921-34-60

Symbols used in figures

- l_u useful travel
- l_e excess travel (no lead precision required)
- l_m actual mean travel (line which best fits the actual travel curve by method of least squares)
- l_0 nominal travel
- l_s specified travel
- c travel compensation (difference between l_s and l_0 to be defined by the customer)
- e_p permitted mean travel deviation (lead error) over the specified travel
- e_a actual (measured) mean travel deviation over the specified travel
- V travel variation (or permissible band width)
- V_{300p} maximum permitted travel variation over 300 mm
- V_{up} maximum permitted travel variation over the useful travel l_u
- V_{300a} measured travel variation over 300 mm
- V_{ua} measured travel variation over l_u
- $V_{2\pi p}$ maximum permitted travel variation within 2π rad
- $V_{2\pi a}$ actual travel variation measured within 2π rad

Fig. 15

Definition of lead error measurement

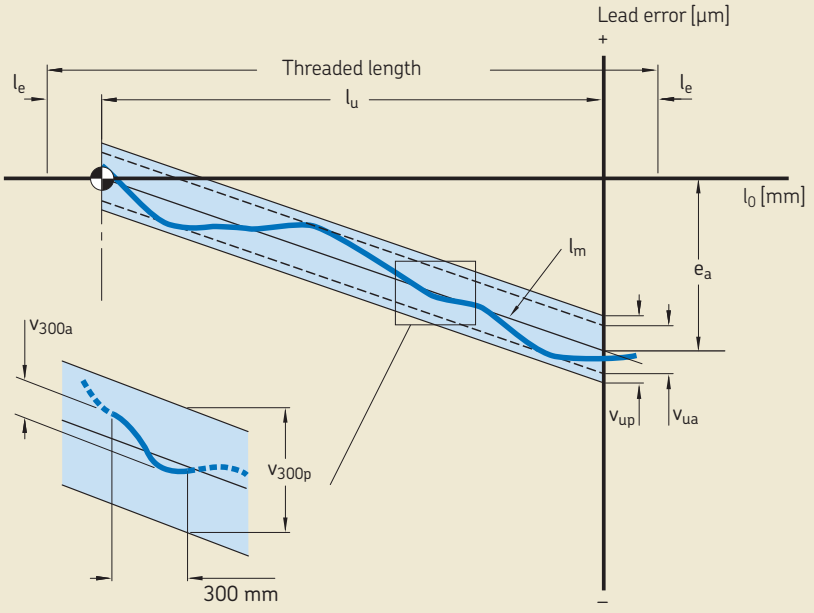

Fig. 16

Case without travel compensation

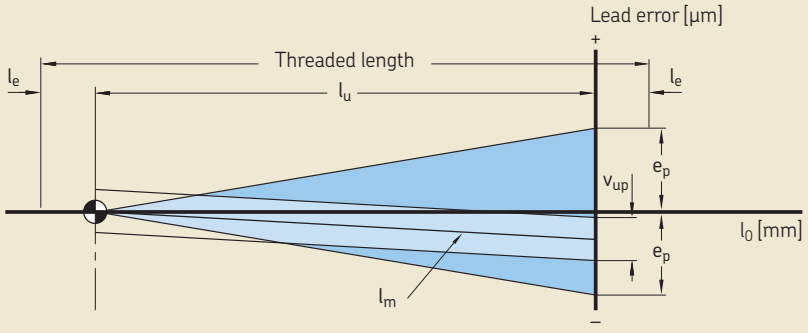

Fig. 17

Case with negative travel compensation

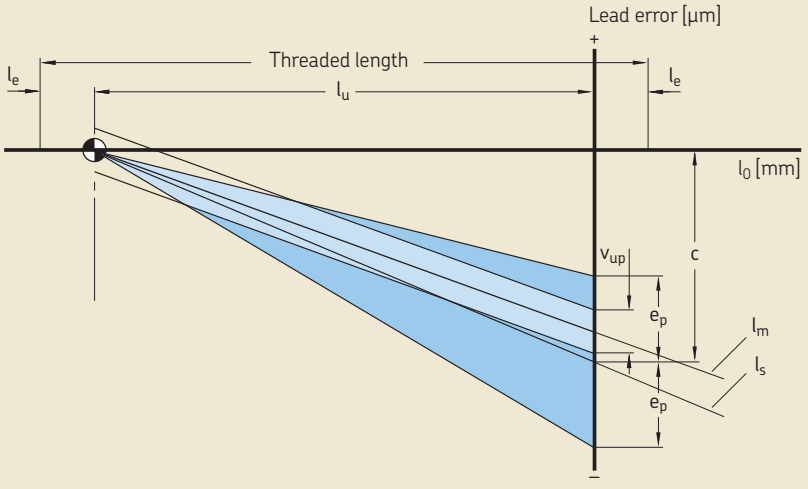

www.lmotion.ru lmotion-mail@ya.ru Тел.:(495) 921-34-60

Permissible travel variation $V_{2\Pi p}$ within 2π rad (one revolution)

The maximum permissible travel variation $V_{2\pi p}$ over one revolution can be an important parameter for some very high precision applications.

This lead precision parameter V_{2pp} is explained in **figure 18**. Values in accordance with ISO standards 3408–3 are provided in **table 17**.

On request, SKF can measure and provide the actual travel variation V_{2pa} over one revolution, for nominal screw diameters up to 40 mm and screw lengths up to 1 000 mm.

Matching of travel deviation for screws working in parallel

When 2 or more screws are used together in parallel on one piece of equipment, it's often important to match their lead deviations.

A value M is defined as the maximum difference between the mean travel of any screw in a set. In cases where three or more screws are installed, M represents the maximum difference between the two most extreme mean travels of the set of screws (→ **table 18**).

Figure 19, **figure 20** and **figure 21** represent 3 typical application examples.

Table 17

Maximum permitted travel variation within 2π rad

Lead precision grade	$V_{2\pi p}$
–	µm
G1	4
G3	6
G5	8

Table 18

Maximum mean travel deviation

Numbers of screws in a set	M
	µm
2	V_{up}
> 2	1,5 V_{up}

Fig. 18

Travel deviation within 2πrad

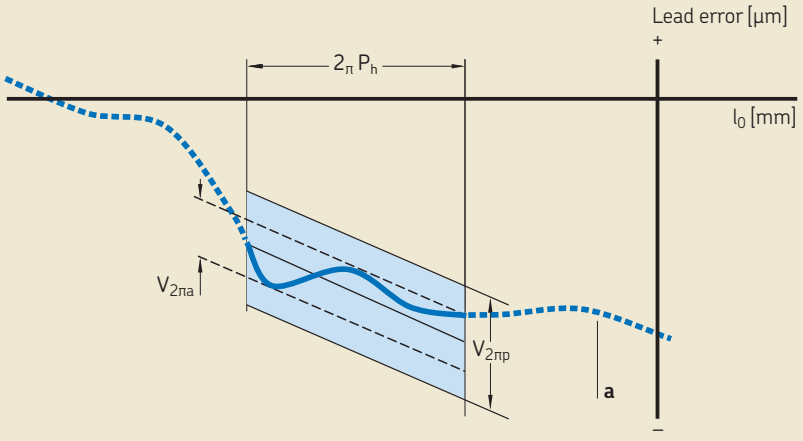

a is actual travel deviation

www.lmotion.ru lmotion-mail@ya.ru Тел.:(495) 921-34-60

Example 1

Two planetary roller screws of type SRC 25 × 5R 700/900 G3 Z WPR with lead precision G3 are working in parallel.

e_p = 18 µm
V_{up} = 16 µm
$M = V_{up}$ = 16 µm

Fig. 19

Example 1: Two matched screws

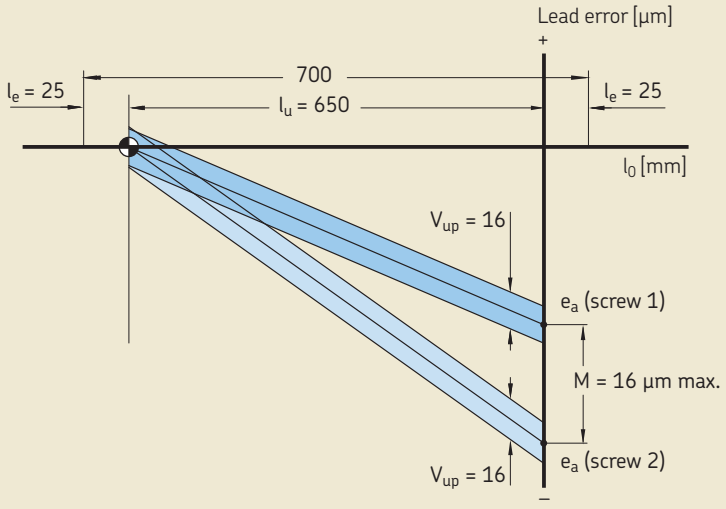

Example 2

Two planetary roller screws of type SRC 25 × 5R 700/900 G3 Z WPR with lead precision G3 are working in parallel. The zero position is regulated at the middle position of the travel of the nut.

e_p = 18 µm
V_{up} = 16 µm
$M = V_{up} / 2$ = 8 µm

Fig. 20

Example 2: Two matched screws with centered zero position

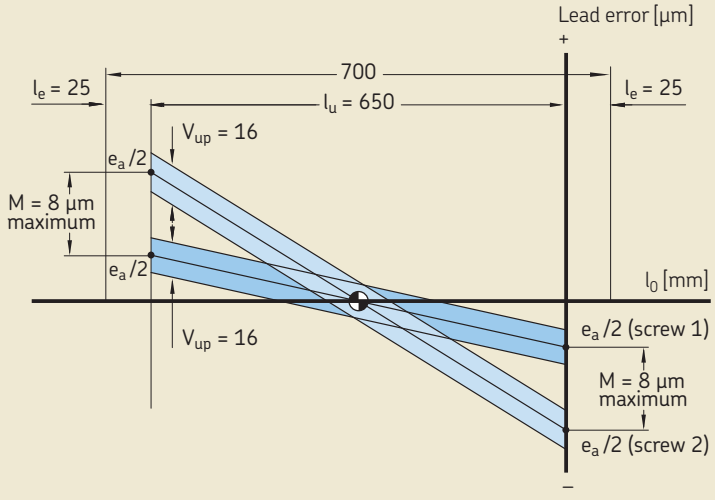

Example 3

Four planetary roller screws of type SRC 25 × 5R 700/900 G3 Z WPR with lead precision G3 are working in parallel.

e_p = 18 µm
V_{up} = 16 µm
$M = 1{,}5\ V_{up}$ = 24 µm

Fig. 21

Example 3: Four matched screws

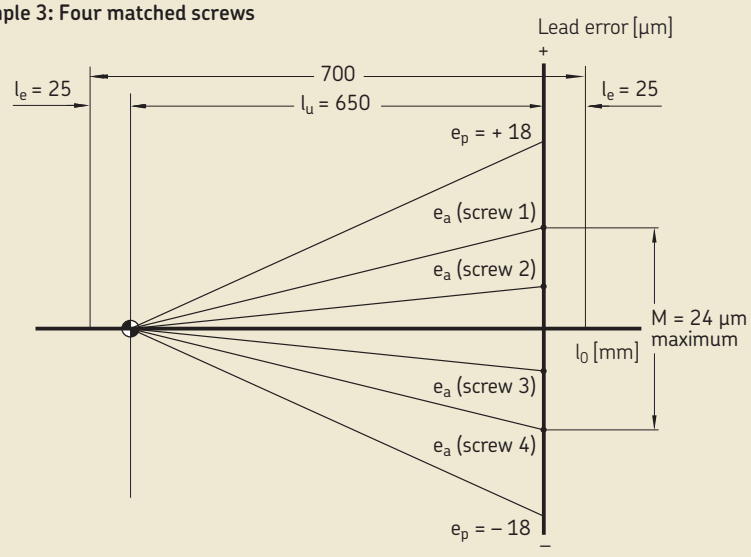

www.lmotion.ru lmotion-mail@ya.ru Тел.:(495) 921-34-60

Manufacturing tolerances

Parameters other than lead precision correspond in standard to class 5 of ISO 3408–3. If the application requires special tolerances, ISO class 3 or ISO class 1, please specify these requirements in the inquiry.

Please refer to **figure 22** and:

- **Tables 19** to **23** for manufacturing tolerances class 5
- **Tables 24** to **28** for manufacturing tolerances class 3
- **Tables 29** to **33** for manufacturing tolerances class 1

Fig. 22

Manufacturing tolerances

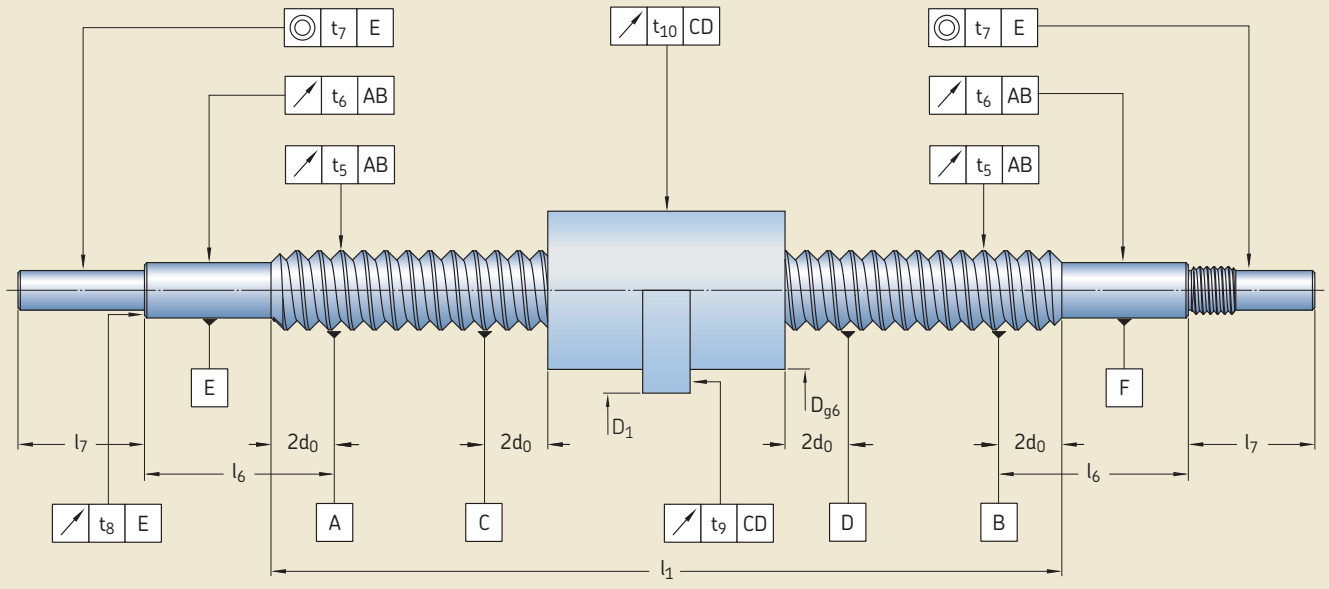

Shaft:

t_5: straightness

t_6: radial run-out of journal diameter

t_7: concentricity of ends/journal diameter

t_8: axial run-out of bearing support face

Nut:

t_9: axial run-out of the nut flange face

t_{10}: radial run-out of the nut diameter/screw

www.lmotion.ru lmotion-mail@ya.ru Тел.:(495) 921-34-60

Manufacturing tolerances class 5

Table 19

Manufacturing tolerances class 5

Nominal diameter d_0 over	incl.	Threaded length l_1 $l_{1\ ref}$	Tolerance if $l_1 \leq l_{1\ ref}$ t_5
mm		mm	µm
6	**12**	320	32
12	**25**	640	32
25	**50**	1 260	32
50	**100**	2 520	32
100	**200**	5 000	32
200		1)	1)

Table 20

Ratio if $l_1 > l_{1\ ref}$ l_1/d_0 ratio	Tolerance t_5
–	µm
≤ 40	64
≤ 60	96
≤ 80	160
≤ 100	256

Table 21

Nominal diameter d_0 over	incl.	Tolerances t_6	$t_{6\ mini}$	t_7	$t_{7\ mini}$	t_8
mm		µm				
6	**20**	$0{,}25 \times l_6$	20	$0{,}10 \times l_7$	8	5
20	**50**	$0{,}20 \times l_6$	25	$0{,}08 \times l_7$	10	5
50	**63**	$0{,}16 \times l_6$	32	$0{,}06 \times l_7$	12	5
63	**125**	$0{,}16 \times l_6$	32	$0{,}06 \times l_7$	12	6
125	**200**	$0{,}13 \times l_6$	40	$0{,}05 \times l_7$	16	8
200		1)	1)	1)	1)	1)

Table 22

Nut flange outer diameter D_1 over	incl.	Tolerance t_9
mm		µm
16	**32**	16
32	**63**	20
63	**125**	25
125	**250**	32
250	**500**	40

Measured by rotating the shaft and nut together

Table 23

Nut body outer diameter D over	incl.	Tolerance t_{10}
mm		µm
16	**32**	16
32	**63**	20
63	**125**	25
125	**250**	32
250	**500**	40

Measured by rotating the nut around the fixed shaft

1) For additional information about tolerances, please contact your local SKF representative

www.lmotion.ru lmotion-mail@ya.ru Тел.:(495) 921-34-60

Manufacturing tolerances class 3

Table 24

Manufacturing tolerances class 3

Nominal diameter d_0 over	incl.	Threaded length l_1 $l_{1\ ref}$	Tolerance if $l_1 \le l_{1\ ref}$ t_5
mm		mm	µm
6	**12**	320	25
12	**25**	640	25
25	**50**	1 260	25
50	**100**	2 520	25
100	**200**	5 000	25
200		[1]	[1]

Table 25

Ratio if $l_1 > l_{1\ ref}$ l_1/d_0 ratio	Tolerance t_5
–	µm
≤ 40	50
≤ 60	75
≤ 80	125
≤ 100	200

Table 26

Nominal diameter d_0 over	incl.	Tolerances t_6	$t_{6\ mini}$	t_7	$t_{7\ mini}$	t_8
mm		µm				
6	**20**	$0{,}15 \times l_6$	12	$0{,}08 \times l_7$	6	4
20	**50**	$0{,}13 \times l_6$	16	$0{,}06 \times l_7$	8	4
50	**63**	$0{,}10 \times l_6$	20	$0{,}05 \times l_7$	10	4
63	**125**	$0{,}10 \times l_6$	20	$0{,}05 \times l_7$	10	5
125	**200**	$0{,}08 \times l_6$	25	$0{,}04 \times l_7$	12	6
200		[1]	[1]	[1]	[1]	[1]

Table 27

Nut flange outer diameter D_1 over	incl.	Tolerance t_9
mm		µm
16	**32**	12
32	**63**	16
63	**125**	20
125	**250**	25
250	**500**	32

Measured by rotating the shaft and nut together

Table 28

Nut body outer diameter D over	incl.	Tolerance t_{10}
mm		µm
16	**32**	12
32	**63**	16
63	**125**	20
125	**250**	25
250	**500**	32

Measured by rotating the nut around the fixed shaft

[1] For additional information about tolerances, please contact your local SKF representative

www.lmotion.ru lmotion-mail@ya.ru Тел.:(495) 921-34-60

Manufacturing tolerances class 1

Table 29

Manufacturing tolerances class 1

Nominal diameter d_0 over	incl.	Threaded length l_1 $l_{1\ ref}$	Tolerance if $l_1 \leq l_{1\ ref}$ t_5
mm		mm	µm
6	**12**	320	20
12	**25**	640	20
25	**50**	1 260	20
50	**100**	2 520	20
100	**200**	5 000	20
200		1)	1)

Table 30

Ratio if $l_1 > l_{1\ ref}$ l_1/d_0 ratio	Tolerance t_5
–	µm
≤ 40	40
≤ 60	60
≤ 80	100
≤ 100	160

Table 31

Nominal diameter d_0 over	incl.	Tolerances t_6	$t_{6\ mini}$	t_7	$t_{7\ mini}$	t_8
mm		µm				
6	**20**	$0{,}12 \times l_6$	10	$0{,}06 \times l_7$	5	3
20	**50**	$0{,}10 \times l_6$	12	$0{,}05 \times l_7$	6	3
50	**63**	$0{,}08 \times l_6$	16	$0{,}04 \times l_7$	8	3
63	**125**	$0{,}08 \times l_6$	16	$0{,}04 \times l_7$	8	4
125	**200**	1)	1)	1)	1)	1)
200	**240**	1)	1)	1)	1)	1)

Table 32

Nut flange outer diameter D_1 over	incl.	Tolerance t_9
mm		µm
16	**32**	10
32	**63**	12
63	**125**	16
125	**250**	20
250	**500**	1)

Measured by rotating the shaft and nut together

Table 33

Nut body outer diameter D over	incl.	Tolerance t_{10}
mm		µm
16	**32**	10
32	**63**	12
63	**125**	16
125	**250**	20
250	**500**	1)

Measured by rotating the nut around the fixed shaft

1) For additional information about tolerances, please contact your local SKF representative

www.lmotion.ru lmotion-mail@ya.ru Тел.:(495) 921-34-60

Planetary roller screws SR

Planetary roller screws operating without recirculation provide the high level of robustness, load carrying capacity, speed and acceleration, service life and reliability for ultimate driving performance.

Application examples

- Presses for plastic injection moulding and blow moulding
- Electro–mechanical presses
- Broaching machines
- Large machine tools
- Car assembly lines (spot welding, gluing, riveting, etc.)
- Factory automation
- Off–highway vehicles
- Oil & gas
- Aerospace
- Steel industry
- Test benches

Design features	User benefits
Satellite rollers without recirculation	Maximum reliability, high speed capability, low noise
Evenly spaced, guided and synchronized rollers	Robustness, resistance to shocks Very well adapted for operation with frequent changes of direction without friction torque singularities Operation within contaminated environments Smooth running
Absence of miniature parts	Very robust and durable
Nominal diameters from 8 to 120 mm	Wide standard assortment to fit most customer applications
Long leads up to 42 mm	High linear speeds up to 1,8 m/s for size 44 × 30
Small leads down to 2 mm	Ideal combination of precise positioning accuracy, increased load carrying capacity, axial stiffness, high speed and low torque requirements
Shaft length up to 8 000 mm	For additional information about longer shaft lengths, please contact your local SKF representative
Maximum n d_0 = 160 000 Acceleration up to 12 000 rad/s^2 for standard SR screws, and can be higher for special variants	High speed rating of rolling screw, improving customer productivity
High dynamic load carrying capacity up to 1 131 kN for SR assortment	Long service life
High static load carrying capacity up to 4 038 kN for SR assortment	Ability to accommodate heavy shock loads without raceway damage
High axial stiffness, further increased with a preloaded version	High positioning accuracy
Roller retention for nut and shaft disassembly	Easy roller screw assembly into customer machinery, no need of sleeve like for ball screws
Optional support bearings	Complete support bearingss ready to use, simplified application design and assembly, easy ordering process
Three standard versions are available: • SR with axial play • BR without backlash (for $d_0 \leq 64$ mm) • PR with preloaded split nut (for $d_0 \leq 64$ mm)	Equipment stiffness and accuracy further increased with the preloaded version
On request, the SR assortment can be delivered with maximized load rating (maximum number of rollers) for sizes $d_0 \leq 80$ mm	Increased load rating within the same roller nut design
Flexible design and manufacturing equipment	Custom designs to fit customer applications, e.g. left hand threads

www.lmotion.ru lmotion-mail@ya.ru Тел.:(495) 921-34-60

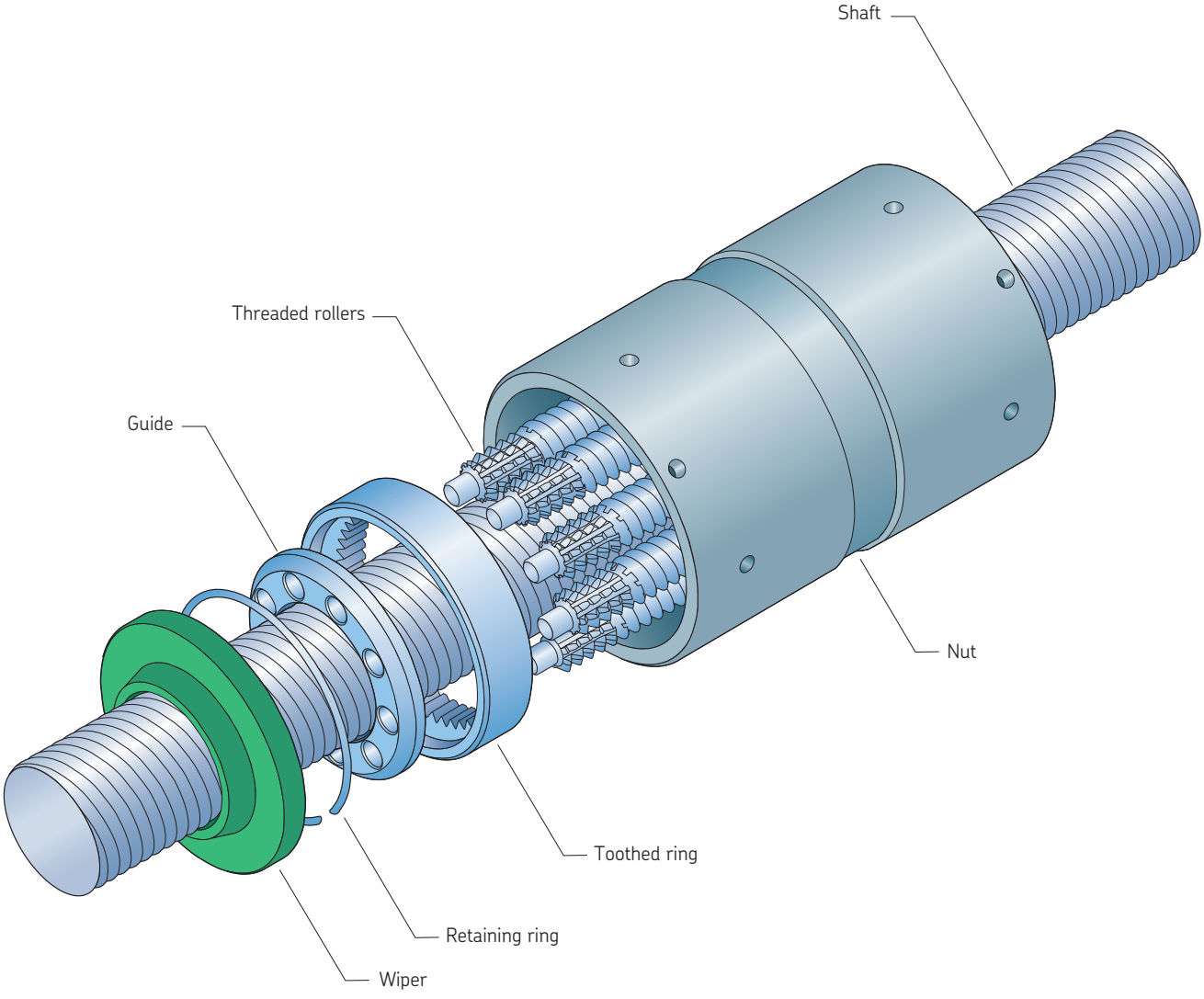

www.lmotion.ru lmotion-mail@ya.ru Тел.:(495) 921-34-60

Standard SRC

Threaded rollers

Components assembly

Dimensions and technical characteristics

d_0	P_h	L_{tp}	C_a[1]	C_{oa}[1]	C_a[2] max	C_{oa}[2] max	η	η'	S_{ap}	T_{be}	m_n	m_s	I_s	I_{nn}	I_{ns}	Z_n	Z_s
mm			kN				–		mm	Nm	kg	kg/m	kgmm²/m	kgmm²		cm³	cm³/m
8	2	500	–	–	8,61	16	0,88	0,87	0,02	0,1	0,1	0,4	3,20	11,4	0,2	0,8	4
	4	500	–	–	8,93	13,4	0,88	0,87	0,02	0,1	0,1	0,4	3,20	11,4	0,2	0,9	4
12	2	750	–	–	13,2	22,5	0,86	0,83	0,02	0,1	0,1	0,9	16,0	22,9	0,3	1,1	6
	5	750	14,1	18,3	15,1	20,4	0,89	0,88	0,02	0,1	0,2	0,9	16,0	22,9	0,4	1,4	6
15	2	975	–	–	23,9	52,7	0,84	0,80	0,02	0,2	0,2	1,4	39,0	45,2	1,5	1,9	7
	5	975	26	43,6	29,7	53,3	0,89	0,88	0,02	0,2	0,2	1,4	39,0	45,2	1,2	2,3	7
	8	975	27,4	40,8	29,4	45,3	0,88	0,86	0,02	0,2	0,2	1,4	39,0	45,2	1,2	2,3	7
18	2	1 200	–	–	30,4	71,0	0,82	0,77	0,02	0,3	0,35	2,0	81,0	81,0	3,0	4,0	8
	5	1 200	–	–	37,7	70,9	0,89	0,87	0,02	0,3	0,35	2,0	81,0	81,0	3,0	4,0	8
	8	1 200	–	–	38,0	61,5	0,89	0,87	0,02	0,3	0,35	2,0	81,0	81,0	3,0	4,0	8
21	2	1 400	–	–	47,4	103	0,80	0,74	0,02	0,3	0,4	2,7	150	141	6,5	5,0	10
	5	1 400	50,6	82,0	57,8	100	0,88	0,86	0,02	0,3	0,4	2,7	150	141	6,5	5,0	10
	6	1 400	52,8	82,2	60,3	100	0,89	0,87	0,02	0,3	0,4	2,7	150	141	6,5	5,0	10
	8	1 400	57	84,1	65,2	103	0,89	0,88	0,02	0,3	0,4	2,7	150	141	6,5	5,0	10
	10	1 400	59,2	83	63,6	92,2	0,89	0,87	0,04	0,3	0,4	2,7	150	141	6,5	5,0	10
24	6	1 600	42,3	65,2	47,3	77	0,88	0,87	0,02	0,4	0,5	3,6	256	173	6,3	4,0	11
	12	1 600	47,7	62,3	53,3	73,7	0,88	0,87	0,04	0,4	0,5	3,6	256	173	6,3	4,0	11
25	5	1 650	68,4	122	78,2	149	0,87	0,85	0,02	0,4	0,7	3,9	301	322	14,3	10	11
	8	1 650	76,1	122	87,0	149	0,89	0,88	0,02	0,4	0,7	3,9	301	322	14,3	10	11
	10	1 650	78,6	118	89,8	145	0,89	0,88	0,04	0,4	0,7	3,9	301	322	14,3	10	11
	15	1 650	85,6	120	91,9	133	0,87	0,85	0,07	0,4	0,7	3,9	301	322	14,3	10	11
30	5	2 000	92	178	105	218	0,86	0,83	0,02	0,6	1,2	5,6	624	762	36,2	14	14
	6	2 000	95	175	109	214	0,87	0,85	0,02	0,6	1,2	5,6	624	762	36,2	14	14
	8	2 000	103	178	117	218	0,88	0,87	0,02	0,6	1,2	5,6	624	762	36,2	14	14
	10	2 000	106	174	122	213	0,89	0,88	0,04	0,6	1,2	5,6	624	762	36,2	14	14
	15	2 000	119	182	127	201	0,88	0,87	0,07	0,6	1,2	5,6	624	762	36,2	14	14
	20	2 000	123	177	132	197	0,86	0,83	0,07	0,8	1,2	5,6	624	762	35,9	14	14

[1] Standard number of rollers. Configuration not available for certain sizes
[2] Maximum number of rollers on request, or standard for certain sizes

www.lmotion.ru lmotion-mail@ya.ru Тел.:(495) 921-34-60

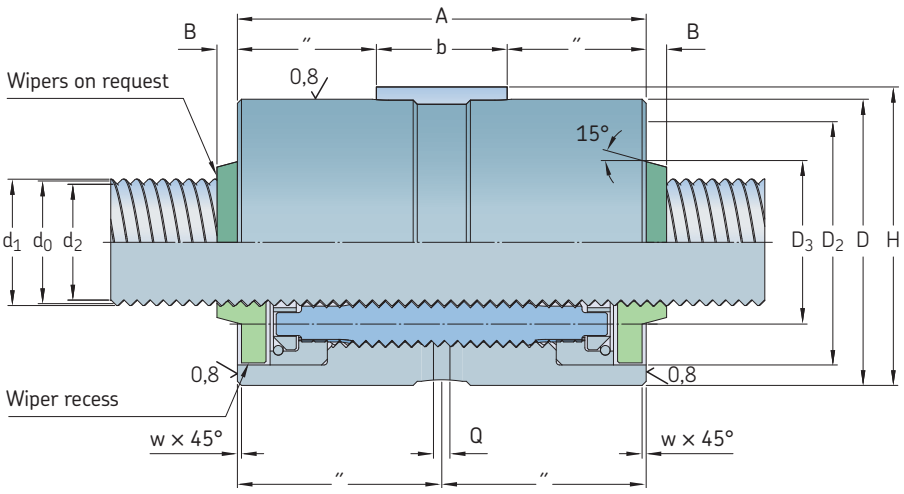

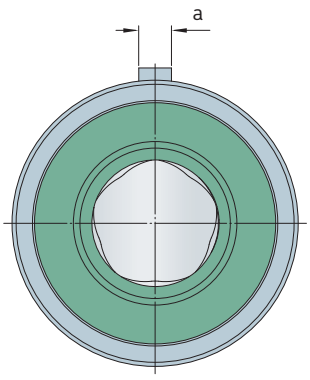

Designation	Dimensions											
	d_1	d_2	D g6/H7	A h12	w	a h9	b	H	Q	B	D_2	D_3
–	mm											
SRC/BRC 8 × 2	8,2	7,6	25	44	0,5	4	12	26,5	5	3	21	13
SRC/BRC 8 × 4	8,4	7,3	25	44	0,5	4	12	26,5	5	3	21	13
SRC/BRC 12 × 2	12,2	11,6	30	44	0,5	4	12	31,5	5	3	25	17
SRC/BRC 12 × 5	12,4	11,3	30	44	0,5	4	12	31,5	5	3	25	17
SRC/BRC 15 × 2	15,2	14,6	35	50	0,5	4	16	36,5	5	3	30	20
SRC/BRC 15 × 5	15,4	14,3	35	50	0,5	4	16	36,5	5	3	30	20
SRC/BRC 15 × 8	15,6	14	35	50	0,5	4	16	36,5	5	3	30	20
SRC/BRC 18 × 2	18,2	17,6	40	58	0,5	5	18	42	5	3	35	23
SRC/BRC 18 × 5	18,4	17,3	40	58	0,5	5	18	42	5	3	35	23
SRC/BRC 18 × 8	18,6	17	40	58	0,5	5	18	42	5	3	35	23
SRC/BRC 21 × 2	21,2	20,6	45	64	0,5	5	20	47	5	4	40,5	26
SRC/BRC 21 × 5	21,4	20,3	45	64	0,5	5	20	47	5	4	40,5	26
SRC/BRC 21 × 6	21,5	20,2	45	64	0,5	5	20	47	5	4	40,5	26
SRC/BRC 21 × 8	21,6	20	45	64	0,5	5	20	47	5	4	40,5	26
SRC/BRC 21 × 10	21,8	19,8	45	64	0,5	5	20	47	5	4	40,5	26
SRC/BRC 24 × 6	24,4	23,3	48	58	0,5	5	20	50	5	6	42	31
SRC/BRC 24 × 12	24,8	22,8	48	58	0,5	5	20	50	5	6	42	31
SRC/BRC 25 × 5	25,4	24,3	53	78	0,5	6	25	55,5	5	6	47	32
SRC/BRC 25 × 8	25,6	24	53	78	0,5	6	25	55,5	5	6	47	32
SRC/BRC 25 × 10	25,8	23,8	53	78	0,5	6	25	55,5	5	6	47	32
SRC/BRC 25 × 15	26,2	23,2	53	78	0,5	6	25	55,5	5	6	47	32
SRC/BRC 30 × 5	30,4	29,4	64	85	0,5	6	32	66,5	5	7	58	38
SRC/BRC 30 × 6	30,5	29,3	64	85	0,5	6	32	66,5	5	7	58	38
SRC/BRC 30 × 8	30,6	29	64	85	0,5	6	32	66,5	5	7	58	38
SRC/BRC 30 × 10	30,8	28,8	64	85	0,5	6	32	66,5	5	7	58	38
SRC/BRC 30 × 15	31,2	28,3	64	85	0,5	6	32	66,5	5	7	58	38
SRC/BRC 30 × 20	31,5	27,6	64	85	0,5	6	32	66,5	5	7	58	38

Preferred range

www.lmotion.ru lmotion-mail@ya.ru Тел.:(495) 921-34-60

Standard SRC

Threaded rollers

Components assembly

Dimensions and technical characteristics

d_0	P_h	L_{tp}	C_a [1]	C_{oa} [1]	C_a [2] max	C_{oa} [2] max	η	η'	S_{ap}	T_{be}	m_n	m_s	I_s	I_{nn}	I_{ns}	Z_n	Z_s
mm			kN				–		mm	Nm	kg	kg/m	kgmm²/m	kgmm²		cm³	cm³/m
36	6	2 400	90,5	179	106	228	0,86	0,83	0,02	0,8	1,2	8,0	1 290	923	46	13	16
	9	2 400	97,5	174	115	222	0,88	0,87	0,02	0,8	1,2	8,0	1 290	923	46	13	16
	12	2 400	107	181	125	230	0,89	0,88	0,04	0,8	1,2	8,0	1 290	873	46	13	16
	18	2 400	114	177	128	209	0,88	0,87	0,07	0,8	1,2	8,0	1 290	873	46	13	16
	24	2 400	124	184	138	218	0,86	0,83	0,07	0,8	1,2	8,0	1 290	873	46	13	16
39	5	2 650	129	269	148	329	0,83	0,80	0,02	0,9	2,1	9,4	1 780	2 030	124	28	18
	10	2 650	153	271	174	331	0,88	0,87	0,04	0,9	2,1	9,4	1 780	2 030	124	28	18
	15	2 650	168	273	192	334	0,89	0,88	0,07	0,9	2,1	9,4	1 780	2 030	124	28	18
	20	2 650	173	261	198	319	0,88	0,87	0,07	0,9	2,1	9,4	1 780	2 030	124	28	18
	25	2 650	175	249	188	277	0,86	0,84	0,07	0,9	2,1	9,4	1 780	2 030	124	28	18
44	8	3 000	130	261	153	333	0,86	0,84	0,02	1,1	1,7	11,9	2 890	1 730	119	23	20
	12	3 000	144	263	169	335	0,89	0,87	0,04	1,1	1,7	11,9	2 890	1 730	119	23	20
	18	3 000	158	265	185	337	0,89	0,88	0,07	1,1	1,7	11,9	2 890	1 730	118	23	20
	24	3 000	168	267	188	315	0,88	0,86	0,07	1,1	1,7	11,9	2 890	1 730	118	23	20
	30	3 000	166	246	185	291	0,85	0,83	0,07	1,1	1,7	11,9	2 890	1 730	118	23	20
48	5	3 300	198	482	240	642	0,81	0,76	0,02	1,3	4,2	14,2	4 090	6 520	371	54	22
	8	3 300	218	471	250	575	0,86	0,83	0,02	1,3	4,2	14,2	4 090	6 520	371	54	22
	10	3 300	232	475	265	581	0,87	0,85	0,04	1,3	4,2	14,2	4 090	6 520	371	54	22
	15	3 300	258	486	295	594	0,89	0,88	0,07	1,3	4,2	14,2	4 090	6 520	371	54	22
	20	3 300	266	462	304	565	0,89	0,88	0,07	1,3	4,2	14,2	4 090	6 520	371	54	22
	25	3 300	286	491	327	600	0,88	0,87	0,07	1,3	4,2	14,2	4 090	6 520	370	54	22
	30	3 300	276	467	316	571	0,87	0,85	0,07	1,3	4,2	14,2	4 090	6 520	370	54	22
56	12	4 000	212	433	249	551	0,87	0,86	0,04	1,7	3,2	19,3	7 580	5 000	385	46	25
	24	4 000	242	419	284	533	0,89	0,88	0,07	1,7	3,2	19,3	7 580	5 000	383	46	25
	36	4 000	258	424	289	501	0,86	0,84	0,07	1,7	3,2	19,3	7 580	5 000	383	46	25

Preferred range
[1] Standard number of rollers
[2] Maximum number of rollers on request

www.lmotion.ru lmotion-mail@ya.ru Тел.:(495) 921-34-60

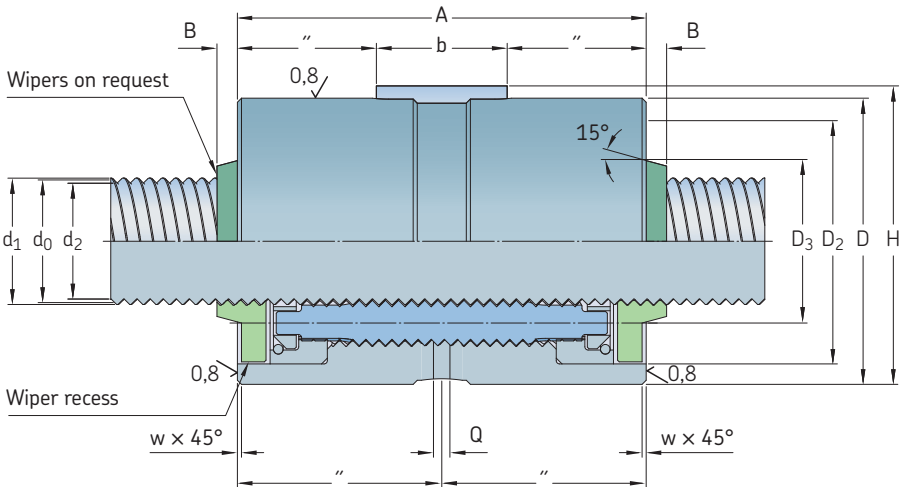

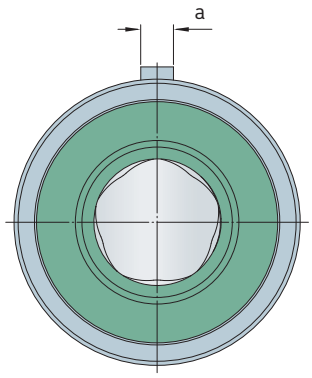

Designation	Dimensions											
	d_1	d_2	D g6/H7	A h12	w	a h9	b	H	Q	B	D_2	D_3
–	mm											
SRC/BRC 36 × 6	36,4	35,4	68	80	0,5	5	25	70	5	8	62	45
SRC/BRC 36 × 9	36,6	35,1	68	80	0,5	5	25	70	5	8	62	45
SRC/BRC 36 × 12	36,8	34,8	68	80	0,5	5	25	70	5	8	62	45
SRC/BRC 36 × 18	37,2	34,2	68	80	0,5	5	25	70	5	8	62	45
SRC/BRC 36 × 24	37,5	33,6	68	80	0,5	5	25	70	5	8	62	45
SRC/BRC 39 × 5	39,4	38,4	80	100	1	8	40	83	7	8	73	50
SRC/BRC 39 × 10	39,8	37,9	80	100	1	8	40	83	7	8	73	50
SRC/BRC 39 × 15	40,2	37,3	80	100	1	8	40	83	7	8	73	50
SRC/BRC 39 × 20	40,5	36,7	80	100	1	8	40	83	7	8	73	50
SRC/BRC 39 × 25	40,9	36,1	80	100	1	8	40	83	7	8	73	50
SRC/BRC 44 × 8	44,5	43,2	80	90	0,5	6	32	82,5	7	8	74	56
SRC/BRC 44 × 12	44,8	42,8	80	90	0,5	6	32	82,5	7	8	74	56
SRC/BRC 44 × 18	45,2	42,3	80	90	0,5	6	32	82,5	7	8	74	56
SRC/BRC 44 × 24	45,5	41,7	80	90	0,5	6	32	82,5	7	8	74	56
SRC/BRC 44 × 30	45,9	41,1	80	90	0,5	6	32	82,5	7	8	74	56
SRC/BRC 48 × 5	48,4	47,4	100	127	1	8	45	103	7	9	90	60
SRC/BRC 48 × 8	48,6	47,1	100	127	1	8	45	103	7	9	90	60
SRC/BRC 48 × 10	48,8	46,9	100	127	1	8	45	103	7	9	90	60
SRC/BRC 48 × 15	49,2	46,3	100	127	1	8	45	103	7	9	90	60
SRC/BRC 48 × 20	49,5	45,8	100	127	1	8	45	103	7	9	90	60
SRC/BRC 48 × 25	49,9	45,2	100	127	1	8	45	103	7	9	90	60
SRC/BRC 48 × 30	50,3	44,6	100	127	1	8	45	103	7	9	90	60
SRC/BRC 56 × 12	56,8	54,9	100	112	1	8	40	103	7	9	93	66
SRC/BRC 56 × 24	57,5	53,8	100	112	1	8	40	103	7	9	93	66
SRC/BRC 56 × 36	58,3	52,5	100	112	1	8	40	103	7	9	93	66

www.lmotion.ru lmotion-mail@ya.ru Тел.:(495) 921-34-60

Standard SRC

Threaded rollers

Components assembly

Dimensions and technical characteristics

d_0	P_h	L_{tp}	C_a[1]	C_{oa}[1]	C_a[2] max	C_{oa}[2] max	η	η'	S_{ap}	T_{be}	m_n	m_s	I_s	I_{nn}	I_{ns}	Z_n	Z_s
mm			kN				–		mm	Nm	kg	kg/m	kgmm²/m	kgmm²		cm³	cm³/m
60	10	4 250	339	780	387	953	0,86	0,83	0,04	1,9	7,3	22,2	9 990	16 500	1 100	100	27
	15	4 250	373	783	426	957	0,88	0,87	0,07	1,9	7,3	22,2	9 990	16 500	1 100	100	27
	20	4 250	395	786	452	960	0,89	0,88	0,07	1,9	7,3	22,2	9 990	16 400	1 100	100	27
64	12	4 600	–	–	296	763	0,87	0,84	0,04	2,1	5,4	25,3	12 900	10 600	984	46	29
	18	4 600	317	726	333	781	0,89	0,87	0,07	2,1	5,2	25,3	12 900	10 500	914	54	29
	24	4 600	329	690	346	743	0,89	0,88	0,07	2,1	5,2	25,3	12 900	10 500	911	54	29
	30	4 600	318	620	356	733	0,89	0,87	0,07	2,1	4,9	25,3	12 900	10 300	771	69	29
	36	4 600	309	589	346	697	0,88	0,86	0,07	2,1	4,9	25,3	12 900	10 300	771	69	29
75	10	5 500	–	–	505	1 486	0,84	0,80	0,04	–	14,6	34,7	24 400	46 900	4 150	140	33
	15	5 500	–	–	561	1 491	0,87	0,85	0,07	–	14,6	34,7	24 400	46 900	4 150	140	33
	20	5 500	–	–	572	1 496	0,88	0,87	0,07	–	14,6	34,7	24 400	46 900	4 150	140	33
80	10	6 000	365	1 040	383	1 115	0,83	0,79	0,02	–	8,9	39,5	31 600	26 000	2 720	100	36
	18	6 000	420	1 020	441	1 098	0,88	0,86	0,07	–	8,9	39,5	31 600	26 000	2 720	100	36
	24	6 000	452	1 040	474	1 120	0,89	0,87	0,07	–	8,9	39,5	31 600	26 000	2 710	100	36
	42	6 000	398	837	445	989	0,88	0,87	0,07	–	8,9	39,5	31 600	25 200	2 290	130	36
99	20	7 500	–	–	925	3 090	0,87	0,85	0,07	–	36,2	60,4	74 000	207 000	17 500	340	44
	25	7 500	–	–	937	3 096	0,89	0,88	0,07	–	36,2	60,4	74 000	207 000	17 500	340	44
120	20	8 000	–	–	1 131	4 141	0,84	0,81	0,07	–	55,5	88,8	160 000	453 000	40 900	540	53
	25	8 000	–	–	1 127	4 038	0,87	0,85	0,07	–	55,5	88,8	160 000	453 000	40 900	540	53

[1] Standard number of rollers. Configuration not available for certain sizes
[2] Maximum number of rollers on request, or standard for certain sizes

www.lmotion.ru lmotion-mail@ya.ru Тел.:(495) 921-34-60

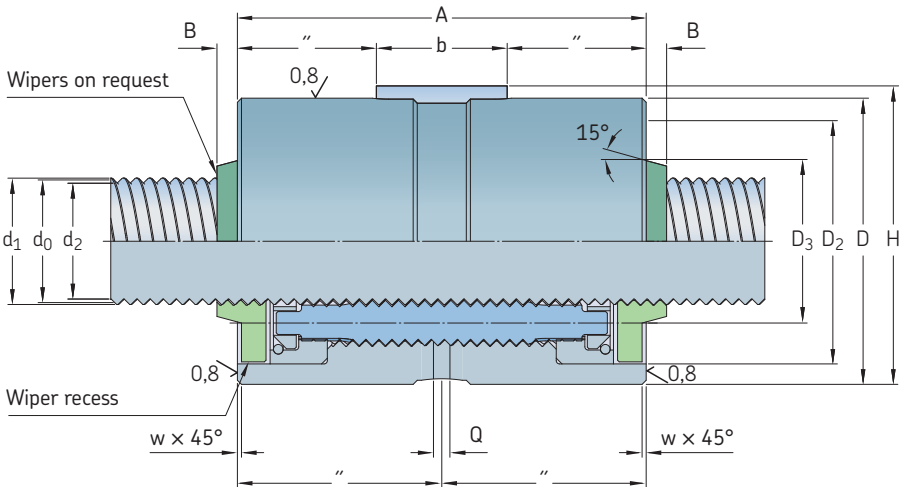

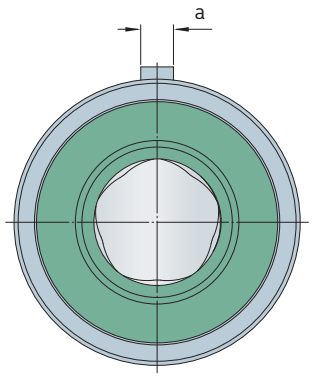

Designation	Dimensions											
	d_1	d_2	D g6/H7	A h12	w	a h9	b	H	Q	B	D_2	D_3
–	mm											
SRC/BRC 60 × 10	60,8	58,9	122	152	1	10	45	125	10,5	9	110	71
SRC/BRC 60 × 15	61,2	58,4	122	152	1	10	45	125	10,5	9	110	71
SRC/BRC 60 × 20	61,5	57,8	122	152	1	10	45	125	10,5	9	110	71
SRC/BRC 64 × 12	64,8	62,9	115	129	1	8	45	118	7	11	106	75
SRC/BRC 64 × 18	65,2	62,3	115	129	1	8	45	118	7	11	106	75
SRC/BRC 64 × 24	65,5	61,8	115	129	1	8	45	118	7	11	106	75
SRC/BRC 64 × 30	65,9	61,2	115	129	1	8	45	118	7	11	106	75
SRC/BRC 64 × 36	66,3	60,6	115	129	1	8	45	118	7	11	106	75
SRC 75 × 10	75,8	73,9	150	191	1	10	63	153	10,5	10	136	87
SRC 75 × 15	76,2	73,4	150	191	1	10	63	153	10,5	10	136	87
SRC 75 × 20	76,5	72,9	150	191	1	10	63	153	10,5	10	136	87
SRC 80 × 10	80,7	79	140	156	1	10	63	143	10,5	12	132	92
SRC 80 × 18	81,2	78,4	140	156	1	10	63	143	10,5	12	132	92
SRC 80 × 24	81,5	77,8	140	156	1	10	63	143	10,5	12	132	92
SRC 80 × 42	82,7	76,1	140	156	1	10	63	143	10,5	12	132	92
SRC 99 × 20	100,5	96,9	200	260	1,5	16	100	204	15	12	180	112
SRC 99 × 25	100,9	96,3	200	260	1,5	16	100	204	15	12	180	112
SRC 120 × 20	121,5	118	240	280	1,5	16	100	244	15	12	220	180
SRC 120 × 25	121,9	117,4	240	280	1,5	16	100	244	15	12	220	180

www.lmotion.ru lmotion-mail@ya.ru Тел.:(495) 921-34-60

Standard SRF

Standard SRP

Threaded rollers

Dimensions and technical characteristics

d_0	P_h	L_{tp}	C_a [1]	C_{oa} [1]	C_a [2] max	C_{oa} [2] max	η	η'	S_{ap}	T_{be}	m_n	m_s	I_s	I_{nn}	I_{ns}	Z_n	Z_s
mm			kN				–		mm	Nm	kg	kg/m	kgmm²/m	kgmm²		cm³	cm³/m
8	4	500	–	–	8,93	13,4	0,88	0,87	0,02	0,1	0,3	0,4	3,2	66,4	0,2	0,9	4
12	5	750	14,1	18,3	15,1	20,4	0,89	0,88	0,02	0,1	0,3	0,9	16	106	0,4	1,4	6
15	5	975	26	43,6	30	53	0,89	0,88	0,02	0,2	0,5	1,4	39	202	1,2	2,3	7
	8	975	27,4	40,8	30	45	0,88	0,86	0,02	0,2	0,5	1,4	39	202	1,2	2,3	7
18	5	1 200	–	–	38	71	0,89	0,87	0,02	0,3	0,6	2	81	244	3	4	8
	8	1 200	–	–	38	62	0,89	0,87	0,02	0,3	0,6	2	81	244	3	4	8
21	5	1 400	50,6	82	58	101	0,88	0,86	0,02	0,3	0,7	2,7	150	437	6,5	5,0	10
	6	1 400	52,8	82,2	60	101	0,89	0,87	0,02	0,3	0,7	2,7	150	437	6,5	5,0	10
	8	1 400	57	84,1	65	103	0,89	0,88	0,02	0,3	0,7	2,7	150	437	6,5	5,0	10
	10	1 400	59,2	83	64	92	0,89	0,87	0,04	0,3	0,7	2,7	150	437	6,5	5,0	10
24	6	1 600	42,3	65,2	47	77	0,88	0,87	0,02	0,4	0,8	3,6	256	525	6,3	4,0	11
	12	1 600	47,7	62,3	53	74	0,88	0,87	0,04	0,4	0,8	3,6	256	525	6,3	4,0	11
25	5	1 650	68,4	122	78	149	0,87	0,85	0,02	0,4	1,4	3,9	301	1 200	14	10	11
	8	1 650	76,1	122	87	149	0,89	0,88	0,02	0,4	1,4	3,9	301	1 200	14	10	11
	10	1 650	78,6	118	90	145	0,89	0,88	0,04	0,4	1,4	3,9	301	1 200	14	10	11
	15	1 650	85,6	120	92	133	0,87	0,85	0,07	0,4	1,4	3,9	301	1 200	14	10	11
30	5	2 000	92	178	106	218	0,86	0,83	0,02	0,6	2,1	5,6	625	2 680	36	14	14
	6	2 000	95	175	109	215	0,87	0,85	0,02	0,6	2,1	5,6	625	2 680	36	14	14
	8	2 000	103	178	118	218	0,88	0,87	0,02	0,6	2,1	5,6	625	2 680	36	14	14
	10	2 000	106	174	122	214	0,89	0,88	0,04	0,6	2,1	5,6	625	2 680	36	14	14
	15	2 000	119	182	127	201	0,88	0,87	0,07	0,6	2,1	5,6	625	2 680	36	14	14
	20	2 000	123	177	133	197	0,86	0,83	0,07	0,8	2,1	5,6	625	2 680	36	14	14

[1] Standard number of rollers. Configuration not available for certain sizes
[2] Maximum number of rollers on request, or standard for certain sizes

www.lmotion.ru lmotion-mail@ya.ru Тел.:(495) 921-34-60

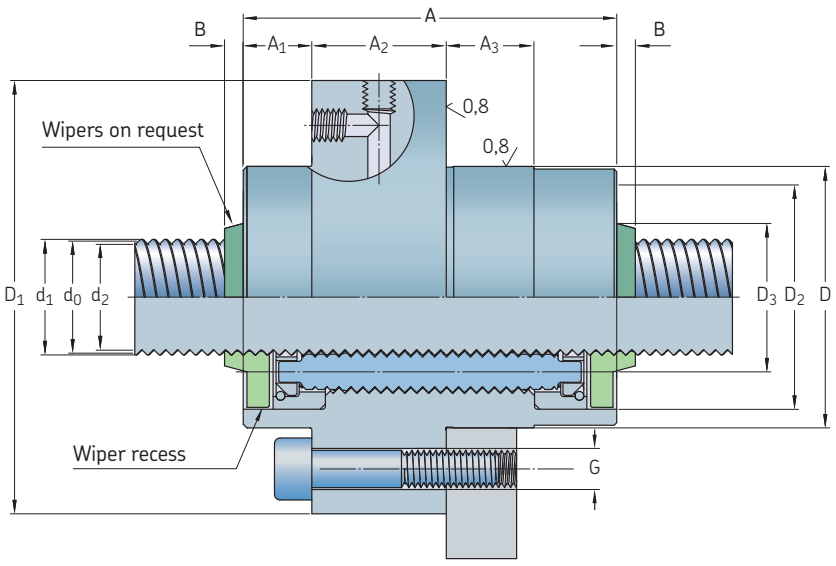

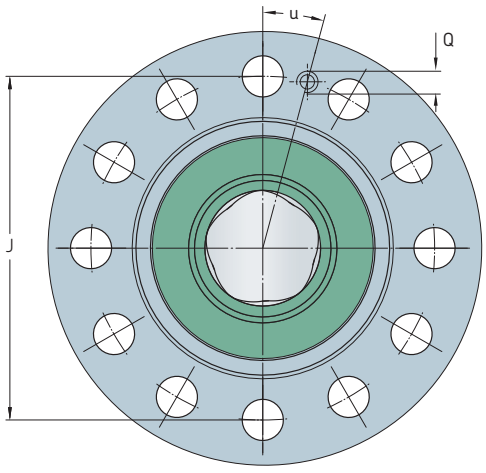

Designation	Dimensions															
	d_1	d_2	D g6/H7	A h12	A_1 SRF/BRF	A_1[1] SRP/BRP	A_3	A_2	D_1	J	G	Q	B	D_2	D_3	u
–	mm															°
SRF/BRF 8 × 4	8,4	7,3	25	44	14	–	14	16	46	36	6 × M4	M6	3	21	13	30
SRF/BRF 12 × 5	12,4	11,3	30	44	14	–	14	16	51	41	6 × M4	M6	3	25	17	30
SRF/BRF 15 × 5	15,4	14,3	35	50	16	–	16	18	58	46	6 × M5	M6	3	30	20	30
SRF/BRF 15 × 8	15,6	14	35	50	16	–	16	18	58	46	6 × M5	M6	3	30	20	30
SRF/BRF 18 × 5	18,4	17,3	40	58	20	–	20	18	63	51	6 × M5	M6	3	35	23	30
SRF/BRF 18 × 8	18,6	17	40	58	20	–	20	18	63	51	6 × M5	M6	3	35	23	30
SRF/BRF/SRP/BRP 21 × 5	21,4	20,3	45	64	23	10	10	18	68	56	6 × M5	M6	4	40,5	26	30
SRF/BRF/SRP/BRP 21 × 6	21,5	20,2	45	64	23	10	10	18	68	56	6 × M5	M6	4	40,5	26	30
SRF/BRF/SRP/BRP 21 × 8	21,6	20	45	64	23	10	10	18	68	56	6 × M5	M6	4	40,5	26	30
SRF/BRF/SRP/BRP 21 × 10	21,8	19,8	45	64	23	10	10	18	68	56	6 × M5	M6	4	40,5	26	30
SRF/BRF/SRP/BRP 24 × 6	24,4	23,3	48	58	20	10	10	18	71	59	6 × M5	M6	6	42	31	30
SRF/BRF/SRP/BRP 24 × 12	24,8	22,8	48	58	20	10	10	18	71	59	6 × M5	M6	6	42	31	30
SRF/BRF/SRP/BRP 25 × 5	25,4	24,3	56	78	29	10	10	20	84	70	6 × M6	M6	6	47	32	30
SRF/BRF/SRP/BRP 25 × 8	25,6	24	56	78	29	10	10	20	84	70	6 × M6	M6	6	47	32	30
SRF/BRF/SRP/BRP 25 × 10	25,8	23,8	56	78	29	10	10	20	84	70	6 × M6	M6	6	47	32	30
SRF/BRF/SRP/BRP 25 × 15	26,2	23,2	56	78	29	10	10	20	84	70	6 × M6	M6	6	47	32	30
SRF/BRF/SRP/BRP 30 × 5	30,4	29,4	64	85	29	12	15	27	97	81	6 × M8	M6	7	58	38	30
SRF/BRF/SRP/BRP 30 × 6	30,5	29,3	64	85	29	12	15	27	97	81	6 × M8	M6	7	58	38	30
SRF/BRF/SRP/BRP 30 × 8	30,6	29	64	85	29	12	15	27	97	81	6 × M8	M6	7	58	38	30
SRF/BRF/SRP/BRP 30 × 10	30,8	28,8	64	85	29	12	15	27	97	81	6 × M8	M6	7	58	38	30
SRF/BRF/SRP/BRP 30 × 15	31,2	28,3	64	85	29	12	15	27	97	81	6 × M8	M6	7	58	38	30
SRF/BRF/SRP/BRP 30 × 20	31,5	27,6	64	85	29	12	15	27	97	81	6 × M8	M6	7	58	38	30

[1] SRP/BRP configuration is not available for screws with nominal diameter d_0 from 8 to 18 mm

www.lmotion.ru lmotion-mail@ya.ru Тел.:(495) 921-34-60

Standard SRF

Standard SRP

Threaded rollers

Dimensions and technical characteristics

d_0	P_h	L_{tp}	C_a [1]	C_{oa} [1]	C_a [2] max	C_{oa} [2] max	η	η'	S_{ap}	T_{be}	m_n	m_s	I_s	I_{nn}	I_{ns}	Z_n	Z_s
mm			kN				–		mm	Nm	kg	kg/m	kgmm²/m	kgmm²		cm³	cm³/m
36	6	2 400	90,5	179	107	229	0,86	0,83	0,02	0,8	2,2	8	1 290	3 170	46	13	16
	9	2 400	97,5	174	115	222	0,88	0,87	0,02	0,8	2,2	8	1 290	3 170	46	13	16
	12	2 400	107	181	126	231	0,89	0,88	0,04	0,8	2,1	8	1 290	3 120	46	13	16
	18	2 400	114	177	128	209	0,88	0,87	0,07	0,8	2,1	8	1 290	3 120	46	13	16
	24	2 400	124	184	139	218	0,86	0,83	0,07	0,8	2,1	8	1 290	3 120	46	13	16
39	5	2 650	129	269	148	329	0,83	0,80	0,02	0,9	4	9,4	1 780	8 360	124	28	18
	10	2 650	153	271	175	332	0,88	0,87	0,04	0,9	4	9,4	1 780	8 360	124	28	18
	15	2 650	168	273	192	334	0,89	0,88	0,07	0,9	4	9,4	1 780	8 360	124	28	18
	20	2 650	173	261	198	319	0,88	0,87	0,07	0,9	4	9,4	1 780	8 360	124	28	18
	25	2 650	175	249	188	277	0,86	0,84	0,07	0,9	4	9,4	1 780	8 360	124	28	18
44	8	3 000	130	261	154	333	0,86	0,84	0,02	1,1	3,6	11,9	2 890	8 030	119	23	20
	12	3 000	144	263	169	335	0,89	0,87	0,04	1,1	3,6	11,9	2 890	8 030	119	23	20
	18	3 000	158	265	186	338	0,89	0,88	0,07	1,1	3,6	11,9	2 890	8 030	118	23	20
	24	3 000	168	267	188	316	0,88	0,86	0,07	1,1	3,6	11,9	2 890	8 030	118	23	20
	30	3 000	166	246	186	292	0,85	0,83	0,07	1,1	3,6	11,9	2 890	8 030	118	23	20
48	5	3 300	198	482	240	643	0,81	0,76	0,02	1,3	7,8	14,2	4 090	18 500	371	54	22
	8	3 300	218	471	250	576	0,86	0,83	0,02	1,3	7,8	14,2	4 090	18 500	371	54	22
	10	3 300	232	475	265	581	0,87	0,85	0,04	1,3	7,8	14,2	4 090	18 500	371	54	22
	15	3 300	258	486	295	595	0,89	0,88	0,07	1,3	7,8	14,2	4 090	18 500	371	54	22
	20	3 300	266	462	304	565	0,89	0,88	0,07	1,3	7,8	14,2	4 090	18 500	371	54	22
	25	3 300	286	491	327	601	0,88	0,87	0,07	1,3	7,8	14,2	4 090	18 500	370	54	22
	30	3 300	276	467	316	571	0,87	0,85	0,07	1,3	7,8	14,2	4 090	18 500	370	54	22
56	12	4 000	212	433	250	552	0,87	0,86	0,04	1,7	6,5	19,3	7 580	21 300	385	46	25
	24	4 000	242	419	285	534	0,89	0,88	0,07	1,7	6,5	19,3	7 580	21 300	383	46	25
	36	4 000	258	424	289	502	0,86	0,84	0,07	1,7	6,5	19,3	7 580	21 300	383	46	25

Preferred range
[1] Standard number of rollers
[2] Maximum number of rollers on request

www.lmotion.ru lmotion-mail@ya.ru Тел.:(495) 921-34-60

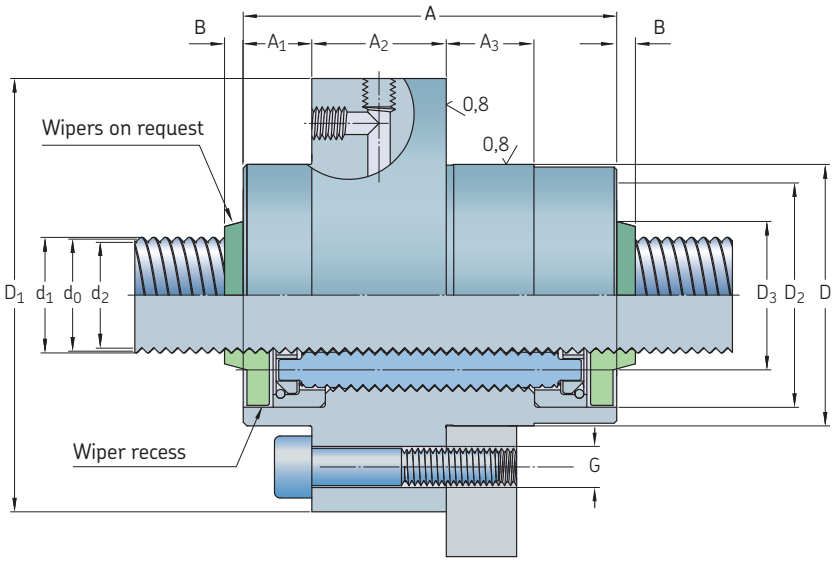

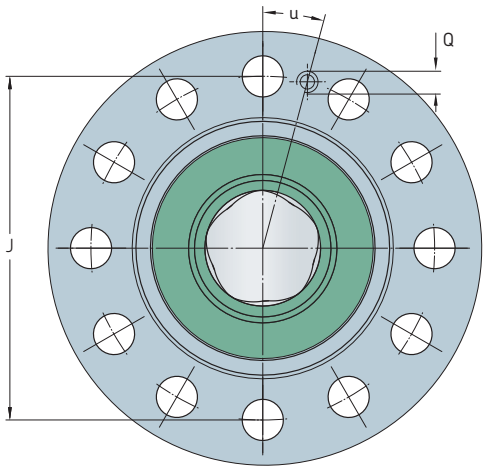

Designation	Dimensions															
	d_1	d_2	D g6/H7	A h12	A_1 SRF/BRF	A_1 SRP/BRP	A_3	A_2	D_1	J	G	Q	B	D_2	D_3	u
–	mm															°
SRF/BRF/SRP/BRP 36 × 6	36,4	35,4	68	80	26,5	12	15	27	102	85	6 × M8	M6	8	62	45	30
SRF/BRF/SRP/BRP 36 × 9	36,6	35,1	68	80	26,5	12	15	27	102	85	6 × M8	M6	8	62	45	30
SRF/BRF/SRP/BRP 36 × 12	36,8	34,8	68	80	26,5	12	15	27	102	85	6 × M8	M6	8	62	45	30
SRF/BRF/SRP/BRP 36 × 18	37,2	34,2	68	80	26,5	12	15	27	102	85	6 × M8	M6	8	62	45	30
SRF/BRF/SRP/BRP 36 × 24	37,5	33,6	68	80	26,5	12	15	27	102	85	6 × M8	M6	8	62	45	30
SRF/BRF/SRP/BRP 39 × 5	39,4	38,4	82	100	33,5	13	18	33	124	102	6 × M10	M6	8	73	50	30
SRF/BRF/SRP/BRP 39 × 10	39,8	37,9	82	100	33,5	13	18	33	124	102	6 × M10	M6	8	73	50	30
SRF/BRF/SRP/BRP 39 × 15	40,2	37,3	82	100	33,5	13	18	33	124	102	6 × M10	M6	8	73	50	30
SRF/BRF/SRP/BRP 39 × 20	40,5	36,7	82	100	33,5	13	18	33	124	102	6 × M10	M6	8	73	50	30
SRF/BRF/SRP/BRP 39 × 25	40,9	36,1	82	100	33,5	13	18	33	124	102	6 × M10	M6	8	73	50	30
SRF/BRF/SRP/BRP 44 × 8	44,5	43,2	82	90	28,5	12	18	33	124	102	6 × M10	M6	8	74	56	30
SRF/BRF/SRP/BRP 44 × 12	44,8	42,8	82	90	28,5	12	18	33	124	102	6 × M10	M6	8	74	56	30
SRF/BRF/SRP/BRP 44 × 18	45,2	42,3	82	90	28,5	12	18	33	124	102	6 × M10	M6	8	74	56	30
SRF/BRF/SRP/BRP 44 × 24	45,5	41,7	82	90	28,5	12	18	33	124	102	6 × M10	M6	8	74	56	30
SRF/BRF/SRP/BRP 44 × 30	45,9	41,1	82	90	28,5	12	18	33	124	102	6 × M10	M6	8	74	56	30
SRF/BRF/SRP/BRP 48 × 5	48,4	47,4	105	127	45	15	20	37	150	127	6 × M12	M8 × 1	9	90	60	30
SRF/BRF/SRP/BRP 48 × 8	48,6	47,1	105	127	45	15	20	37	150	127	6 × M12	M8 × 1	9	90	60	30
SRF/BRF/SRP/BRP 48 × 10	48,8	46,9	105	127	45	15	20	37	150	127	6 × M12	M8 × 1	9	90	60	30
SRF/BRF/SRP/BRP 48 × 15	49,2	46,3	105	127	45	15	20	37	150	127	6 × M12	M8 × 1	9	90	60	30
SRF/BRF/SRP/BRP 48 × 20	49,5	45,8	105	127	45	15	20	37	150	127	6 × M12	M8 × 1	9	90	60	30
SRF/BRF/SRP/BRP 48 × 25	49,9	45,2	105	127	45	15	20	37	150	127	6 × M12	M8 × 1	9	90	60	30
SRF/BRF/SRP/BRP 48 × 30	50,3	44,6	105	127	45	15	20	37	150	127	6 × M12	M8 × 1	9	90	60	30
SRF/BRF/SRP/BRP 56 × 12	56,8	54,9	105	112	37,5	15	20	37	150	127	6 × M12	M8 × 1	9	93	66	30
SRF/BRF/SRP/BRP 56 × 24	57,5	53,8	105	112	37,5	15	20	37	150	127	6 × M12	M8 × 1	9	93	66	30
SRF/BRF/SRP/BRP 56 × 36	58,3	52,5	105	112	37,5	15	20	37	150	127	6 × M12	M8 × 1	9	93	66	30

www.lmotion.ru lmotion-mail@ya.ru Тел.:(495) 921-34-60

Standard SRF

Standard SRP

Threaded rollers

Dimensions and technical characteristics

d_0	P_h	L_{tp}	C_a[1]	C_{oa}[1]	C_a[2] max	C_{oa}[2] max	η	η'	S_{ap}	T_{be}	m_n	m_s	I_s	I_{nn}	I_{ns}	Z_n	Z_s
mm			kN				–		mm	Nm	kg	kg/m	kgmm²/m	kgmm²		cm³	cm³/m
60	10	4 250	339	780	388	953	0,86	0,83	0,04	1,9	12,1	22,2	9 990	52 800	1 100	100	27
	15	4 250	373	783	427	957	0,88	0,87	0,07	1,9	12,1	22,2	9 990	52 800	1 100	100	27
	20	4 250	395	786	452	961	0,89	0,88	0,07	1,9	12,1	22,2	9 990	52 800	1 100	100	27
64	12	4 600	–	–	297	764	0,87	0,84	0,04	2,1	11,3	25,3	12 900	50 200	984	46	29
	18	4 600	317	726	333	782	0,89	0,87	0,07	2,1	11,2	25,3	12 900	50 100	914	54	29
	24	4 600	329	690	346	743	0,89	0,88	0,07	2,1	11,2	25,3	12 900	50 100	911	54	29
	30	4 600	318	620	356	733	0,89	0,87	0,07	2,1	10,9	25,3	12 900	49 900	771	69	29
	36	4 600	309	589	346	697	0,88	0,86	0,07	2,1	10,9	25,3	12 900	49 900	771	69	29
75	10	5 500	–	–	505	1 486	0,84	0,8	0,04	–	20,6	34,7	24 400	114 000	4 150	140	33
	15	5 500	–	–	561	1 491	0,87	0,85	0,07	–	20,6	34,7	24 400	114 000	4 150	140	33
	20	5 500	–	–	572	1 496	0,88	0,87	0,07	–	20,6	34,7	24 400	114 000	4 150	140	33
80	10	6 000	365	1 040	384	1 115	0,83	0,79	0,02	–	17,7	39,5	31 600	108 000	2 720	100	36
	18	6 000	420	1 020	442	1 099	0,88	0,86	0,07	–	17,7	39,5	31 600	108 000	2 720	100	36
	24	6 000	452	1 040	475	1 121	0,89	0,87	0,07	–	17,7	39,5	31 600	108 000	2 710	100	36
	42	6 000	398	837	445	989	0,88	0,87	0,07	–	17,7	39,5	31 600	108 000	2 290	130	36
99	20	7 500	–	–	925	3 091	0,87	0,85	0,07	–	48,3	60,4	74 000	449 000	17 500	340	44
	25	7 500	–	–	937	3 096	0,89	0,88	0,07	–	48,3	60,4	74 000	449 000	17 500	340	44
120	20	8 000	–	–	1 131	4 041	0,84	0,81	0,07	–	89	88,8	160 000	$1,29 \times 10^6$	40 900	540	53
	25	8 000	–	–	1 127	4 038	0,87	0,85	0,07	–	89	88,8	160 000	$1,29 \times 10^6$	40 900	540	53

[1] Standard number of rollers. Configuration not available for certain sizes
[2] Maximum number of rollers on request, or standard for certain sizes

www.lmotion.ru lmotion-mail@ya.ru Тел.:(495) 921-34-60

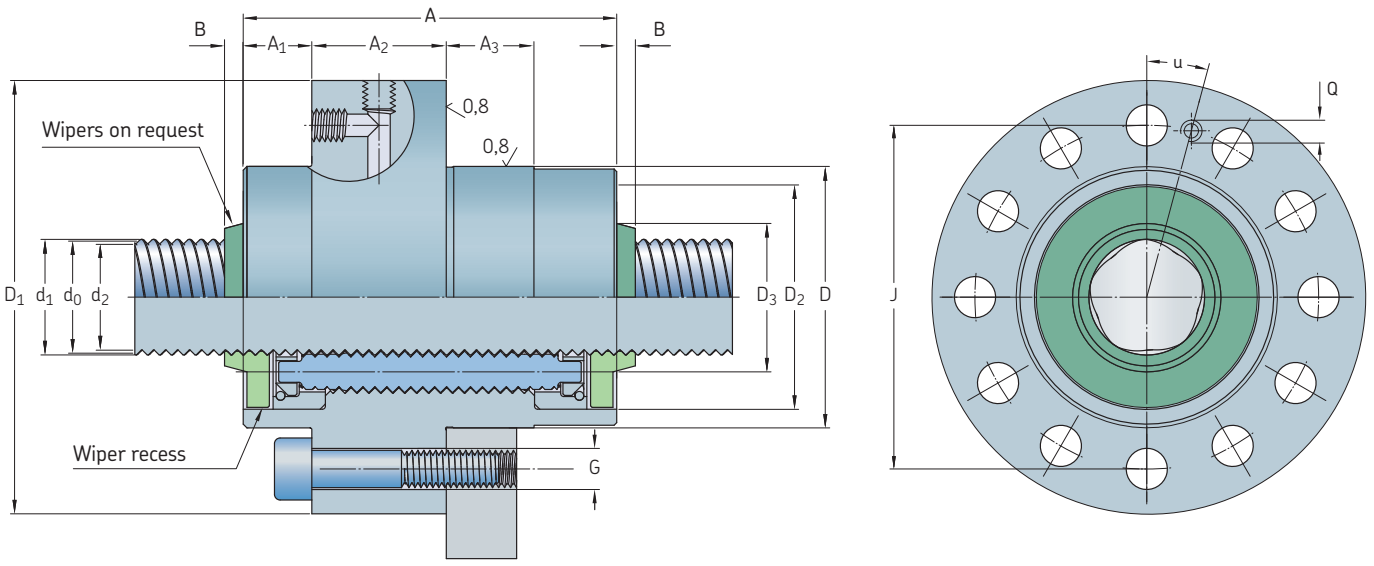

Designation	Dimensions															
	d_1	d_2	D g6/H7	A h12	A_1 SRF/BRF	A_1 SRP/BRP	A_3	A_2	D_1	J js12	G	Q	B	D_2	D_3	u
–	mm															°
SRF/BRF/SRP/BRP 60 × 10	60,8	58,9	122	152	53,5	17	25	45	180	150	6 × M16	M8 × 1	9	110	71	30
SRF/BRF/SRP/BRP 60 × 15	61,2	58,4	122	152	53,5	17	25	45	180	150	6 × M16	M8 × 1	9	110	71	30
SRF/BRF/SRP/BRP 60 × 20	61,5	57,8	122	152	53,5	17	25	45	180	150	6 × M16	M8 × 1	9	110	71	30
SRF/BRF/SRP/BRP 64 × 12	64,8	62,9	120	129	42	17	25	45	180	150	6 × M16	M8 × 1	11	106	75	30
SRF/BRF/SRP/BRP 64 × 18	65,2	62,3	120	129	42	17	25	45	180	150	6 × M16	M8 × 1	11	106	75	30
SRF/BRF/SRP/BRP 64 × 24	65,5	61,8	120	129	42	17	25	45	180	150	6 × M16	M8 × 1	11	106	75	30
SRF/BRF/SRP/BRP 64 × 30	65,9	61,2	120	129	42	17	25	45	180	150	6 × M16	M8 × 1	11	106	75	30
SRF/BRF/SRP/BRP 64 × 36	66,3	60,6	120	129	42	17	25	45	180	150	6 × M16	M8 × 1	11	106	75	30
SRF/SRP 75 × 10	75,8	73,9	150	191	73	21	35	45	210	180	8 × M16	M8 × 1	10	136	87	22,5
SRF/SRP 75 × 15	76,2	73,4	150	191	73	21	35	45	210	180	8 × M16	M8 × 1	10	136	87	22,5
SRF/SRP 75 × 20	76,5	72,9	150	191	73	21	35	45	210	180	8 × M16	M8 × 1	10	136	87	22,5
SRF/SRP 80 × 10	80,7	79	150	156	55,5	19	35	45	210	180	8 × M16	M8 × 1	12	132	92	22,5
SRF/SRP 80 × 18	81,2	78,4	150	156	55,5	19	35	45	210	180	8 × M16	M8 × 1	12	132	92	22,5
SRF/SRP 80 × 24	81,5	77,8	150	156	55,5	19	35	45	210	180	8 × M16	M8 × 1	12	132	92	22,5
SRF/SRP 80 × 42	82,7	76,1	150	156	55,5	19	35	45	210	180	8 × M16	M8 × 1	12	132	92	22,5
SRF/SRP 99 × 20	100,5	96,9	200	260	102,5	26	40	55	275	245	12 × M16	M8 × 1	12	180	112	15
SRF/SRP 99 × 25	100,9	96,3	200	260	102,5	26	40	55	275	245	12 × M16	M8 × 1	12	180	112	15
SRF/SRP 120 × 20	121,5	118	260	280	112,5	27	60	55	340	305	12 × M16	M12 × 1,75	12	220	180	15
SRF/SRP 120 × 25	121,9	117,4	260	280	112,5	27	60	55	340	305	12 × M16	M12 × 1,75	12	220	180	15

www.lmotion.ru lmotion-mail@ya.ru Тел.:(495) 921-34-60

PRU preloaded planetary roller screws with cylindrical nut

d **8 – 30** mm

Standard PRU

Threaded rollers

Components assembly

Dimensions and technical characteristics

d_0	P_h	L_{tp}	C_a[1]	C_{oa}[1]	C_a[2] max	C_{oa}[2] max	η	η'	R_{ng}	R_{nr}	T_{pr}	F_{pr}	m_n	m_s	I_s	I_{nn}	I_{ns}	Z_n	Z_s
mm			kN				–		N/µm		Nm	N	kg	kg/m	kgmm²/m	kgmm²		cm³	cm³/m
8	2	400	–	–	4,74	7,98	0,88	0,87	173	193	0,1	602	0,1	0,4	3,2	11,4	0,1	0,8	4
	4	400	–	–	4,92	6,72	0,88	0,87	110	150	0,1	236	0,1	0,4	3,2	11,4	0,1	0,9	4
12	2	600	–	–	7,25	11,2	0,86	0,83	249	298	0,2	1 007	0,2	0,9	16	22,9	0,4	1,1	6
	5	600	7,76	9,17	8,32	10,2	0,89	0,88	180	240	0,2	570	0,2	0,9	16	22,9	0,4	1,4	6
15	2	750	–	–	13,1	26,4	0,84	0,80	498	565	0,3	1 211	0,2	1,4	39	45,2	1,2	1,9	7
	5	750	14,3	21,8	16,4	26,6	0,89	0,88	290	380	0,3	932	0,2	1,4	39	45,2	1,2	2,3	7
	8	750	15,1	20,4	16,2	22,7	0,88	0,86	242	315	0,3	954	0,2	1,4	39	45,2	1,2	2,3	7
18	2	900	–	–	16,8	35,5	0,82	0,77	529	644	0,4	1 500	0,36	2	81	81	3	4,0	8
	5	900	–	–	20,8	35,5	0,89	0,87	348	385	0,4	1 078	0,35	2	81	81	3	4,0	8
	8	900	–	–	20,9	30,8	0,89	0,87	202	224	0,4	630	0,35	2	81	81	3	4,0	8
21	2	1 100	–	–	26,1	51,6	0,80	0,74	675	762	0,5	1 740	0,4	2,7	150	141	6,5	5,0	10
	5	1 100	27,9	41	31,8	50,1	0,88	0,86	400	520	0,5	1 341	0,4	2,7	150	141	6,5	5,0	10
	6	1 100	29,1	41,1	33,2	50,2	0,89	0,87	359	467	0,5	1 394	0,4	2,7	150	141	6,5	5,0	10
	8	1 100	31,4	42,1	35,9	51,4	0,89	0,88	311	404	0,5	1 354	0,4	2,7	150	141	6,5	5,0	10
	10	1 100	32,6	41,5	35	46,1	0,89	0,87	200	260	0,5	557	0,4	2,7	150	141	6,5	5,0	10
24	6	1 250	23,3	32,6	26,1	38,5	0,88	0,87	370	490	0,6	1 597	0,5	3,6	256	173	6,3	4,0	11
	12	1 250	26,3	31,2	29,4	36,8	0,88	0,87	150	200	0,6	541	0,5	3,6	256	173	6,3	4,0	11
25	5	1 300	37,7	60,9	43,1	74,4	0,87	0,85	460	600	0,6	1 577	0,7	3,9	301	322	14,3	10	11
	8	1 300	41,9	60,8	47,9	74,3	0,89	0,88	347	385	0,6	1 335	0,7	3,9	301	322	14,3	10	11
	10	1 300	43,3	59,2	49,5	72,4	0,89	0,88	290	380	0,6	1 008	0,7	3,9	301	322	14,3	10	11
	15	1 300	47,2	59,8	50,6	66,5	0,87	0,85	180	230	0,6	426	0,7	3,9	301	322	14,3	10	11
30	5	1 600	50,7	89,2	57,9	109	0,86	0,83	620	810	0,9	1 844	1,2	5,6	624	762	36,2	14	14
	6	1 600	52,3	87,7	59,8	107	0,87	0,85	561	729	0,9	1 780	1,2	5,6	624	762	36,2	14	14
	8	1 600	56,5	89,1	64,6	109	0,88	0,87	489	544	0,9	1 629	1,2	5,6	624	762	36,2	14	14
	10	1 600	58,6	87,2	67	107	0,89	0,88	420	550	0,9	1 472	1,2	5,6	624	762	36,2	14	14
	15	1 600	65,4	90,7	70,1	101	0,88	0,87	280	311	0,9	601	1,2	5,6	624	762	35,9	14	14
	20	1 600	67,9	88,6	72,9	98,5	0,86	0,83	190	260	1,1	555	1,2	5,6	624	762	35,9	14	14

[1] Standard number of rollers. Configuration not available for certain sizes
[2] Maximum number of rollers on request, or standard for certain sizes

www.lmotion.ru lmotion-mail@ya.ru Тел.:(495) 921-34-60

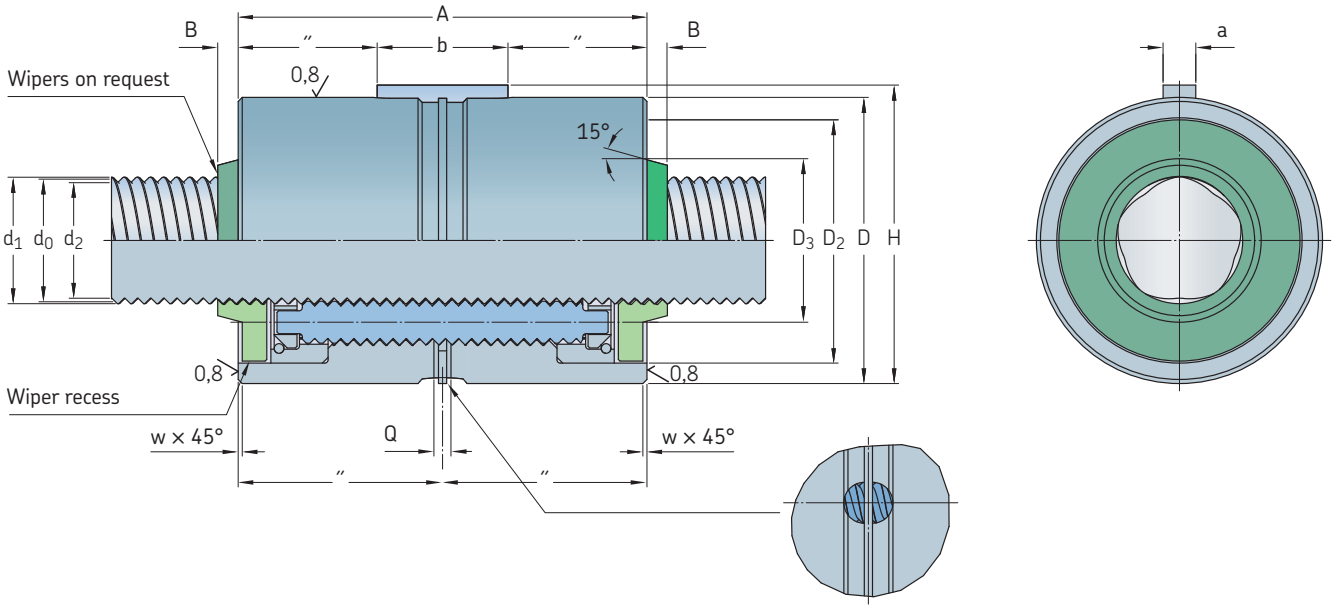

Designation	Dimensions											
	d_1	d_2	D g6/H7	A h12	w	a h9	b	H	Q	B	D_2	D_3
–	mm											
PRU 8 × 2	8,2	7,6	25	44	0,5	4	12	26,5	5	3	21	13
PRU 8 × 4	8,4	7,3	25	44	0,5	4	12	26,5	5	3	21	13
PRU 12 × 2	12,2	11,6	30	44	0,5	4	12	31,5	5	3	25	17
PRU 12 × 5	12,4	11,3	30	44	0,5	4	12	31,5	5	3	25	17
PRU 15 × 2	15,2	14,6	35	50	0,5	4	16	36,5	5	3	30	20
PRU 15 × 5	15,4	14,3	35	50	0,5	4	16	36,5	5	3	30	20
PRU 15 × 8	15,6	14	35	50	0,5	4	16	36,5	5	3	30	20
PRU 18 × 2	18,2	17,6	40	58	0,5	5	18	42	5	3	35	23
PRU 18 × 5	18,4	17,3	40	58	0,5	5	18	42	5	3	35	23
PRU 18 × 8	18,6	17,0	40	58	0,5	5	18	42	5	3	35	23
PRU 21 × 2	21,2	20,6	45	64	0,5	5	20	47	5	4	40,5	26
PRU 21 × 5	21,4	20,3	45	64	0,5	5	20	47	5	4	40,5	26
PRU 21 × 6	21,5	20,2	45	64	0,5	5	20	47	5	4	40,5	26
PRU 21 × 8	21,6	20	45	64	0,5	5	20	47	5	4	40,5	26
PRU 21 × 10	21,8	19,8	45	64	0,5	5	20	47	5	4	40,5	26
PRU 24 × 6	24,4	23,3	48	58	0,5	5	20	50	5	6	42	31
PRU 24 × 12	24,8	22,8	48	58	0,5	5	20	50	5	6	42	31
PRU 25 × 5	25,4	24,3	53	78	0,5	6	25	55,5	5	6	47	32
PRU 25 × 8	25,6	24,0	53	78	0,5	6	25	55,5	5	6	47	32
PRU 25 × 10	25,8	23,8	53	78	0,5	6	25	55,5	5	6	47	32
PRU 25 × 15	26,2	23,2	53	78	0,5	6	25	55,5	5	6	47	32
PRU 30 × 5	30,4	29,4	64	85	0,5	6	32	66,5	5	7	58	38
PRU 30 × 6	30,5	29,3	64	85	0,5	6	32	66,5	5	7	58	38
PRU 30 × 8	30,6	29	64	85	0,5	6	32	66,5	5	7	58	38
PRU 30 × 10	30,8	28,8	64	85	0,5	6	32	66,5	5	7	58	38
PRU 30 × 15	31,2	28,3	64	85	0,5	6	32	66,5	5	7	58	38
PRU 30 × 20	31,5	27,6	64	85	0,5	6	32	66,5	5	7	58	38

www.lmotion.ru lmotion-mail@ya.ru Тел.:(495) 921-34-60

Standard PRU

Threaded rollers

Components assembly

Dimensions and technical characteristics

d_0	P_h	L_{tp}	C_a [1]	C_{oa} [1]	C_a [2] max	C_{oa} [2] max	η	η'	R_{ng}	R_{nr}	T_{pr}	F_{pr}	m_n	m_s	I_s	I_{nn}	I_{ns}	Z_n	Z_s
mm			kN				–		N/µm		Nm	N	kg	kg/m	kgmm²/m	kgmm²		cm³	cm³/m
36	6	1 900	49,8	89,7	58,5	114	0,86	0,83	770	1 000	1,2	2 334	1,2	8	1 290	823	45,7	13	16
	9	1 900	53,7	87	63,1	111	0,88	0,87	530	689	1,2	1 960	1,2	8	1 290	823	45,7	13	16
	12	1 900	58,7	90,6	69	115	0,89	0,88	510	660	1,2	1 820	1,2	8	1 290	823	45,7	13	16
	18	1 900	62,9	88,3	70,3	104	0,88	0,87	260	330	1,2	707	1,2	8	1 290	823	45,7	13	16
	24	1 900	68,1	92,2	76,1	109	0,86	0,83	240	310	1,5	649	1,2	8	1 290	823	45,7	13	16
39	5	2 100	71,2	134	81,4	164	0,83	0,80	750	980	1,3	2 288	2,1	9,4	1 780	2 030	124	28	18
	10	2 100	84,1	135	96,1	166	0,88	0,87	500	650	1,3	1 965	2,1	9,4	1 780	2 030	124	28	18
	15	2 100	92,4	136	106	167	0,89	0,88	390	510	1,3	1 465	2,1	9,4	1 780	2 030	124	28	18
	20	2 100	95,2	130	109	159	0,88	0,87	220	290	1,3	694	2,1	9,4	1 780	2 030	124	28	18
	25	2 100	96,3	125	103	138	0,86	0,84	210	280	1,8	697	2,1	9,4	1 780	2 030	124	28	18
44	8	2 400	71,9	131	84,4	166	0,86	0,84	688	895	1,6	2 432	1,7	11,9	2 890	1 730	119	23	20
	12	2 400	79,2	131	93	167	0,89	0,87	610	800	1,6	2 297	1,7	11,9	2 890	1 730	119	23	20
	18	2 400	86,9	132	102	169	0,89	0,88	430	550	1,6	1 497	1,7	11,9	2 890	1 730	118	23	20
	24	2 400	92,5	133	103	158	0,88	0,86	290	380	1,6	725	1,7	11,9	2 890	1 730	118	23	20
	30	2 400	91,4	123	102	146	0,85	0,83	190	250	2,1	727	1,7	11,9	2 890	1 730	118	23	20
48	5	2 600	109	241	132	321	0,81	0,76	1 080	1 410	1,9	2 698	4,2	14,2	4 090	6 520	371	54	22
	8	2 600	120	235	138	288	0,86	0,83	889	1 156	1,9	2 583	4,2	14,2	4 090	6 520	371	54	22
	10	2 600	128	238	146	290	0,87	0,85	760	980	1,9	2 405	4,2	14,2	4 090	6 520	371	54	22
	15	2 600	142	243	162	297	0,89	0,88	600	780	1,9	2 072	4,2	14,2	4 090	6 520	371	54	22
	20	2 600	146	231	167	283	0,89	0,88	460	600	1,9	1 423	4,2	14,2	4 090	6 520	371	54	22
	25	2 600	157	246	180	300	0,88	0,87	320	480	1,9	782	4,2	14,2	4 090	6 520	370	54	22
	30	2 600	152	233	174	285	0,87	0,85	344	384	2,5	1 260	4,2	14,2	4 090	6 520	370	54	22
56	12	3 100	117	217	137	276	0,87	0,86	810	1 060	2,4	2 952	3,2	19,3	7 580	5 000	385	46	25
	24	3 100	133	210	157	267	0,89	0,88	410	530	2,4	1 579	3,2	19,3	7 580	5 000	383	46	25
	36	3 100	142	212	159	251	0,86	0,84	290	370	3,2	910	3,2	19,3	7 580	5 000	383	46	25

[1] Standard number of rollers
[2] Maximum number of rollers on request

www.lmotion.ru lmotion-mail@ya.ru Тел.:(495) 921-34-60

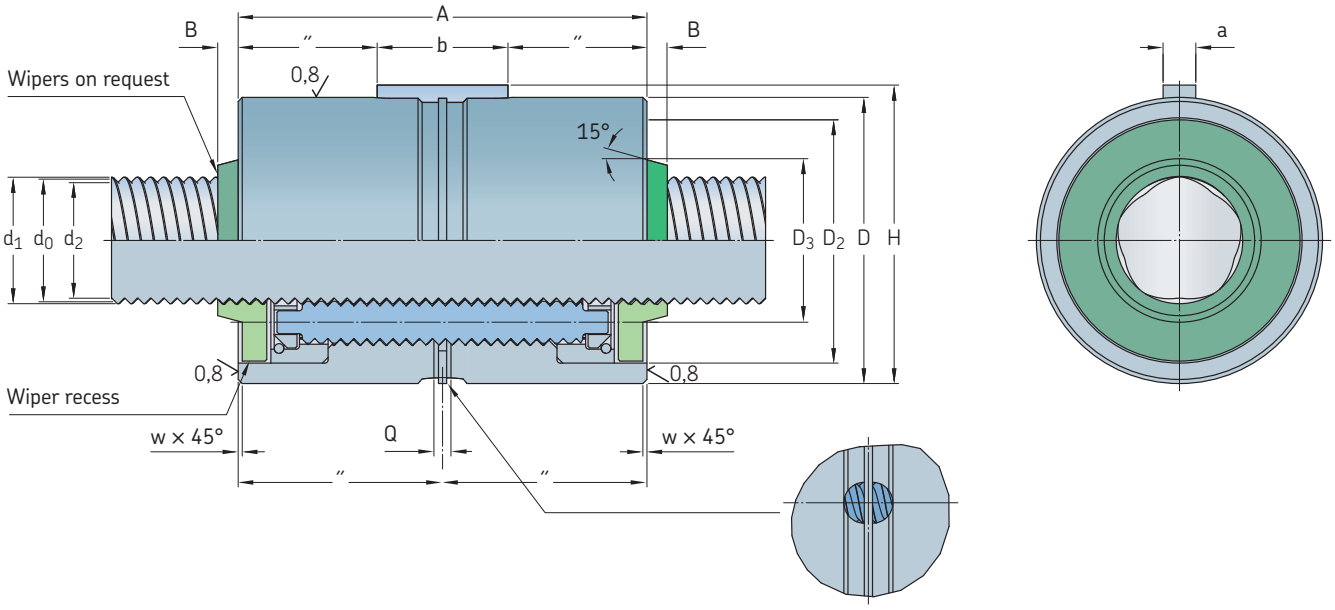

Designation	Dimensions											
	d_1	d_2	D g6/H7	A h12	w	a h9	b	H	Q	B	D_2	D_3
–	mm											
PRU 36 × 6	36,4	35,4	68	80	0,5	5	25	70	5	8	62	45
PRU 36 × 9	36,6	35,1	68	80	0,5	5	25	70	5	8	62	45
PRU 36 × 12	36,8	34,8	68	80	0,5	5	25	70	5	8	62	45
PRU 36 × 18	37,2	34,2	68	80	0,5	5	25	70	5	8	62	45
PRU 36 × 24	37,5	33,6	68	80	0,5	5	25	70	5	8	62	45
PRU 39 × 5	39,4	38,4	80	100	1	8	40	83	7	8	73	50
PRU 39 × 10	39,8	37,9	80	100	1	8	40	83	7	8	73	50
PRU 39 × 15	40,2	37,3	80	100	1	8	40	83	7	8	73	50
PRU 39 × 20	40,5	36,7	80	100	1	8	40	83	7	8	73	50
PRU 39 × 25	40,9	36,1	80	100	1	8	40	83	7	8	73	50
PRU 44 × 8	44,5	43,2	80	90	0,5	6	32	82,5	7	8	74	56
PRU 44 × 12	44,8	42,8	80	90	0,5	6	32	82,5	7	8	74	56
PRU 44 × 18	45,2	42,3	80	90	0,5	6	32	82,5	7	8	74	56
PRU 44 × 24	45,5	41,7	80	90	0,5	6	32	82,5	7	8	74	56
PRU 44 × 30	45,9	41,1	80	90	0,5	6	32	82,5	7	8	74	56
PRU 48 × 5	48,4	47,4	100	127	1	8	45	103	7	9	90	60
PRU 48 × 8	48,6	47,1	100	127	1	8	45	103	7	9	90	60
PRU 48 × 10	48,8	46,9	100	127	1	8	45	103	7	9	90	60
PRU 48 × 15	49,2	46,3	100	127	1	8	45	103	7	9	90	60
PRU 48 × 20	49,5	45,8	100	127	1	8	45	103	7	9	90	60
PRU 48 × 25	49,9	45,2	100	127	1	8	45	103	7	9	90	60
PRU 48 × 30	50,3	44,6	100	127	1	8	45	103	7	9	90	60
PRU 56 × 12	56,8	54,9	100	112	1	8	40	103	7	9	93	66
PRU 56 × 24	57,5	53,8	100	112	1	8	40	103	7	9	93	66
PRU 56 × 36	58,3	52,5	100	112	1	8	40	103	7	9	93	66

www.lmotion.ru lmotion-mail@ya.ru Тел.:(495) 921-34-60

Standard PRU

Threaded rollers

Components assembly

Dimensions and technical characteristics

d_0	P_h	L_{tp}	C_a [1]	C_{oa} [1]	C_a [2] max	C_{oa} [2] max	η	η'	R_{ng}	R_{nr}	T_{pr}	F_{pr}	m_n	m_s	I_s	I_{nn}	I_{ns}	Z_n	Z_s
mm			kN				–		N/µm		Nm	N	kg	kg/m	kgmm²/m	kgmm²		cm³	cm³/m
60	10	3 400	187	390	213	476	0,86	0,83	1 030	1 340	2,7	2 913	7,3	22,2	9 990	16 500	1 100	100	27
	15	3 400	206	391	235	478	0,88	0,87	830	1 080	2,7	2 635	7,3	22,2	9 990	16 500	1 100	100	27
	20	3 400	218	393	249	480	0,89	0,88	700	910	2,7	2 326	7,3	22,2	9 990	16 400	1 100	100	27
64	12	3 650	–	–	166	382	0,87	0,84	930	1 200	3	3 328	5,4	25,3	12 900	10 600	984	46	29
	18	3 650	177	363	186	391	0,89	0,87	790	1 030	3	2 900	5,2	25,3	12 900	10 500	914	54	29
	24	3 650	184	345	193	371	0,89	0,88	640	840	3	2 318	5,2	25,3	12 900	10 500	911	54	29
	30	3 650	178	310	199	366	0,89	0,87	440	570	3	1 292	4,9	25,3	12 900	10 300	771	69	29
	36	3 650	173	295	193	348	0,88	0,86	350	450	3	892	4,9	25,3	12 900	10 300	771	69	29

[1] Standard number of rollers. Configuration not available for certain sizes
[2] Maximum number of rollers on request, or standard for certain sizes

www.lmotion.ru lmotion-mail@ya.ru Тел.:(495) 921-34-60

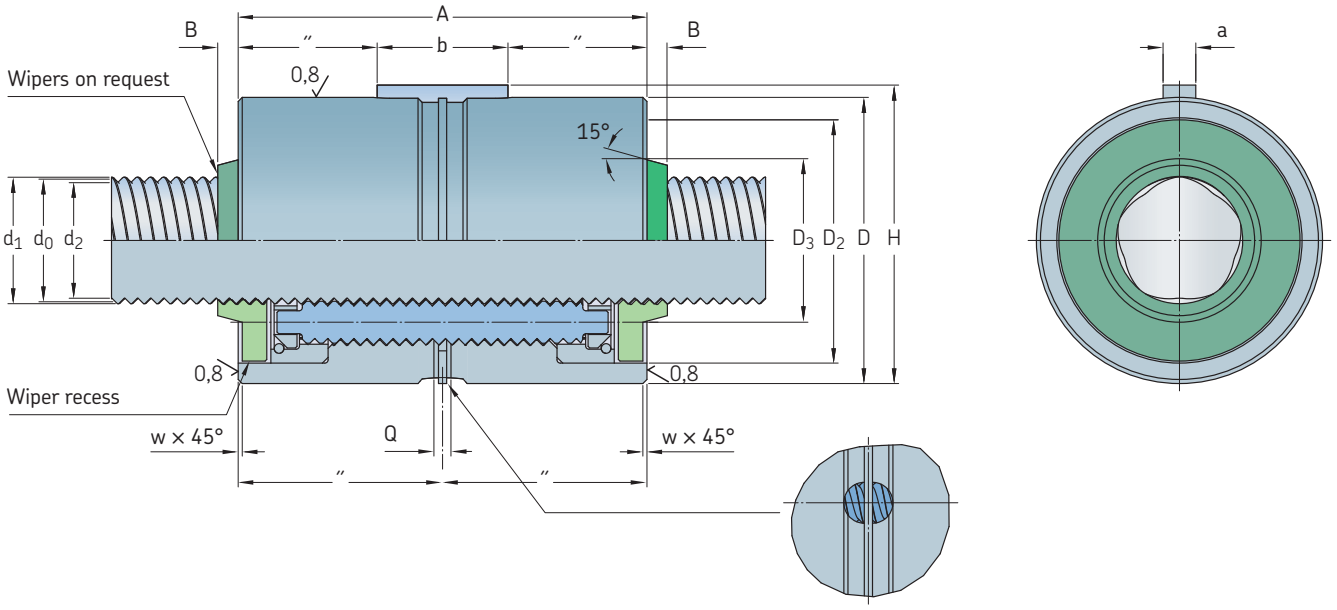

Designation	Dimensions											
	d_1	d_2	D g6/H7	A h12	w	a h9	b	H	Q	B	D_2	D_3
–	mm											
PRU 60 × 10	60,8	58,9	122	152	1	10	45	125	10,5	9	110	71
PRU 60 × 15	61,2	58,4	122	152	1	10	45	125	10,5	9	110	71
PRU 60 × 20	61,5	57,8	122	152	1	10	45	125	10,5	9	110	71
PRU 64 × 12	64,8	62,9	115	129	1	8	45	118	7	11	106	75
PRU 64 × 18	65,2	62,3	115	129	1	8	45	118	7	11	106	75
PRU 64 × 24	65,5	61,8	115	129	1	8	45	118	7	11	106	75
PRU 64 × 30	65,9	61,2	115	129	1	8	45	118	7	11	106	75
PRU 64 × 36	66,3	60,6	115	129	1	8	45	118	7	11	106	75

www.lmotion.ru lmotion-mail@ya.ru Тел.:(495) 921-34-60

Standard PRK

Threaded rollers

Components assembly

Dimensions and technical characteristics

d_0	P_h	L_{tp}	C_a[1]	C_{oa}[1]	C_a[2] max	C_{oa}[2] max	η	η'	R_{ng}	R_{nr}	T_{pr}	F_{pr}	m_n	m_s	I_s	I_{nn}	I_{ns}	Z_n	Z_s
mm			kN				–		N/µm		Nm	N	kg	kg/m	kgmm²/m	kgmm²		cm³	cm³/m
8	4	400	–	–	4,92	6,72	0,88	0,87	110	150	0,1	236	0,3	0,4	3,2	66,4	0,1	0,9	4
12	5	600	7,76	9,17	8,32	10,2	0,89	0,88	180	240	0,2	570	0,3	0,9	16	106	0,4	1,4	6
15	5	750	14,3	21,8	16,4	26,6	0,89	0,88	290	380	0,3	932	0,5	1,4	39	202	1,2	2,3	7
	8	750	15,1	20,4	16,2	22,7	0,88	0,86	242	315	0,3	954	0,5	1,4	39	202	1,2	2,3	7
18	5	900	–	–	20,8	35,5	0,89	0,87	348	385	0,4	1 078	0,6	2	81	244	5,7	4	8
	8	900	–	–	20,9	30,8	0,89	0,87	202	224	0,4	630	0,6	2	81	244	5,7	4	8
21	5	1 100	27,9	41	31,8	50,1	0,88	0,86	400	520	0,5	1 341	0,7	2,7	150	437	6,5	5	10
	6	1 100	29,1	41,1	33,2	50,2	0,89	0,87	359	467	0,5	1 394	0,7	2,7	150	437	6,5	5	10
	8	1 100	31,4	42,1	35,9	51,4	0,89	0,88	311	404	0,5	1 354	0,7	2,7	150	437	6,5	5	10
	10	1 100	32,6	41,5	35,0	46,1	0,89	0,87	200	260	0,5	557	0,7	2,7	150	437	6,5	5	10
24	6	1 250	23,3	32,6	26,1	38,5	0,88	0,87	370	490	0,6	1 597	0,8	3,6	256	524	6,3	4	11
	12	1 250	26,3	31,2	29,4	36,8	0,88	0,87	150	200	0,6	541	0,8	3,6	256	524	6,3	4	11
25	5	1 300	37,7	60,9	43,1	74,4	0,87	0,85	460	600	0,6	1 577	1,4	3,9	301	1 200	14,3	10	11
	8	1 300	41,9	60,8	47,9	74,3	0,89	0,88	347	385	0,6	1 335	1,4	3,9	301	1 200	14,3	10	11
	10	1 300	43,3	59,2	49,5	72,4	0,89	0,88	290	380	0,6	1 008	1,4	3,9	301	1 200	14,3	10	11
	15	1 300	47,2	59,8	50,6	66,5	0,87	0,85	180	230	0,6	426	1,4	3,9	301	1 200	14,3	10	11
30	5	1 600	50,7	89,2	57,9	109	0,86	0,83	620	810	0,9	1 844	2,1	5,6	624	2 680	36,2	14	14
	6	1 600	52,3	87,7	59,8	107	0,87	0,85	561	729	0,9	1 780	2,1	5,6	624	2 680	36,2	14	14
	8	1 600	56,5	89,1	64,6	109	0,88	0,87	489	544	0,9	1 629	2,1	5,6	624	2 680	36,2	14	14
	10	1 600	58,6	87,2	67	107	0,89	0,88	420	550	0,9	1 472	2,1	5,6	624	2 680	36,2	14	14
	15	1 600	65,4	90,7	70,1	101	0,88	0,87	280	311	0,9	601	2,1	5,6	624	2 680	36,2	14	14
	20	1 600	67,9	88,6	72,9	98,5	0,86	0,83	190	260	1,1	555	2,1	5,6	624	2 680	35,9	14	14
36	6	1 900	49,8	89,7	58,5	114	0,86	0,83	770	1 000	1,2	2 334	2,1	8	1 290	3 170	45,7	13	16
	9	1 900	53,7	87	63,1	111	0,88	0,87	530	689	1,2	1 960	2,1	8	1 290	3 170	45,7	13	16
	12	1 900	58,7	90,6	69	115	0,89	0,88	510	660	1,2	1 820	2,1	8	1 290	3 120	45,7	13	16
	18	1 900	62,9	88,3	70,3	104	0,88	0,87	260	330	1,2	707	2,1	8	1 290	3 120	45,7	13	16
	24	1 900	68,1	92,2	76,1	109	0,86	0,83	240	310	1,5	649	2,1	8	1 290	3 120	45,7	13	16

[1] Standard number of rollers. Configuration not available for certain sizes
[2] Maximum number of rollers on request, or standard for certain sizes

www.lmotion.ru lmotion-mail@ya.ru Тел.:(495) 921-34-60

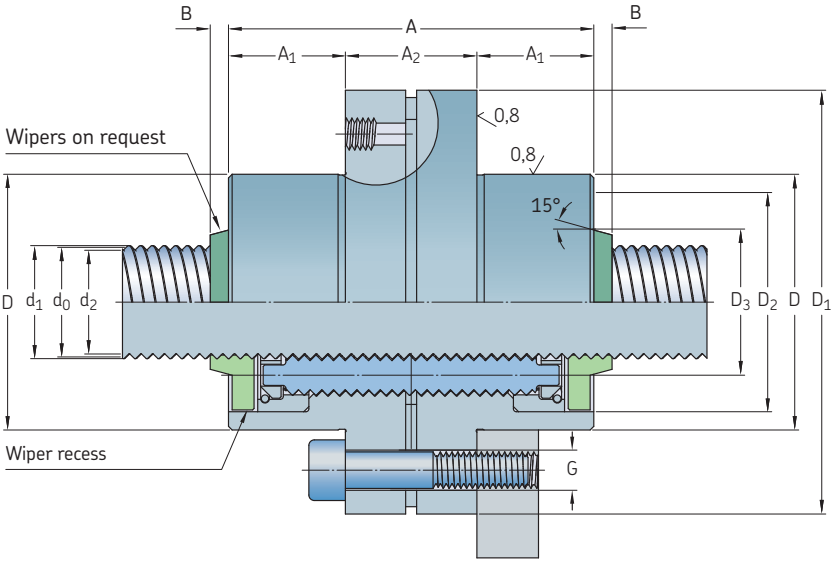

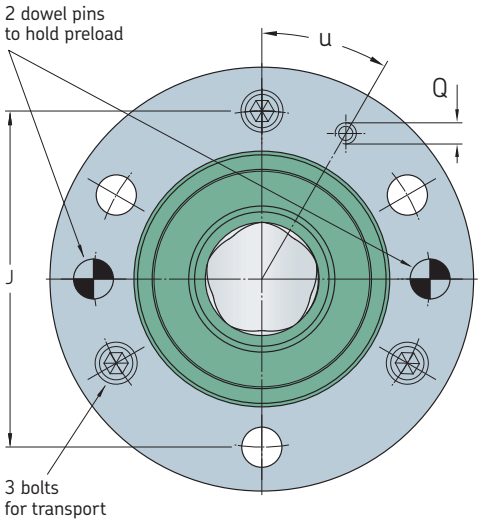

Designation	Dimensions													
	d_1	d_2	D g6/H7	A h12	A_1	A_2	D_1	J js12	G	Q	B	D_2	D_3	u
–	mm													°
PRK 8 × 4	8,4	7,3	25	44	14	16	46	36	6 × M4	M6	3	21	13	30
PRK 12 × 5	12,4	11,3	30	44	14	16	51	41	6 × M4	M6	3	25	17	30
PRK 15 × 5	15,4	14,3	35	50	16	18	58	46	6 × M5	M6	3	30	20	30
PRK 15 × 8	15,6	14	35	50	16	18	58	46	6 × M5	M6	3	30	20	30
PRK 18 × 5	18,4	17,3	40	58	20	18	63	51	6 × M6	M7	3	35	23	30
PRK 18 × 8	18,6	17	40	58	20	18	63	51	6 × M7	M8	3	35	23	30
PRK 21 × 5	21,4	20,3	45	64	23	18	68	56	6 × M5	M6	4	40,5	26	30
PRK 21 × 6	21,5	20,2	45	64	23	18	68	56	6 × M5	M6	4	40,5	26	30
PRK 21 × 8	21,6	20	45	64	23	18	68	56	6 × M5	M6	4	40,5	26	30
PRK 21 × 10	21,8	19,8	45	64	23	18	68	56	6 × M5	M6	4	40,5	26	30
PRK 24 × 6	24,4	23,3	48	58	20	18	71	59	6 × M5	M6	6	42	31	30
PRK 24 × 12	24,8	22,8	48	58	20	18	71	59	6 × M5	M6	6	42	31	30
PRK 25 × 5	25,4	24,3	56	78	29	20	84	70	6 × M6	M6	6	47	32	30
PRK 25 × 8	25,6	24	56	78	29	20	84	70	6 × M7	M7	6	47	32	30
PRK 25 × 10	25,8	23,8	56	78	29	20	84	70	6 × M6	M6	6	47	32	30
PRK 25 × 15	26,2	23,2	56	78	29	20	84	70	6 × M6	M6	6	47	32	30
PRK 30 × 5	30,4	29,4	64	85	29	27	98	81	6 × M8	M6	7	58	38	30
PRK 30 × 6	30,5	29,3	64	85	29	27	98	81	6 × M8	M6	7	58	38	30
PRK 30 × 8	30,6	29	64	85	29	27	98	81	6 × M9	M7	7	58	38	30
PRK 30 × 10	30,8	28,8	64	85	29	27	98	81	6 × M10	M8	7	58	38	30
PRK 30 × 15	31,2	28,3	64	85	29	27	98	81	6 × M11	M9	7	58	38	30
PRK 30 × 20	31,5	27,6	64	85	29	27	98	81	6 × M8	M6	7	58	38	30
PRK 36 × 6	36,4	35,4	68	80	26,5	27	102	85	6 × M8	M6	8	62	45	30
PRK 36 × 9	36,6	35,1	68	80	26,5	27	102	85	6 × M8	M6	8	62	45	30
PRK 36 × 12	36,8	34,8	68	80	26,5	27	102	85	6 × M8	M6	8	62	45	30
PRK 36 × 18	37,2	34,2	68	80	26,5	27	102	85	6 × M8	M6	8	62	45	30
PRK 36 × 24	37,5	33,6	68	80	26,5	27	102	85	6 × M8	M6	8	62	45	30

www.lmotion.ru lmotion-mail@ya.ru Тел.:(495) 921-34-60

Standard PRK

Threaded rollers

Components assembly

Dimensions and technical characteristics

d_0	P_h	L_{tp}	C_a[1]	C_{oa}[1]	C_a[2] max	C_{oa}[2] max	η	η'	R_{ng}	R_{nr}	T_{pr}	F_{pr}	m_n	m_s	I_s	I_{nn}	I_{ns}	Z_n	Z_s
mm			kN				–		N/µm		Nm	N	kg	kg/m	kgmm²/m	kgmm²		cm³	cm³/m
39	5	2 100	71,2	134	81,4	164	0,83	0,80	750	980	1,3	2 288	4	9,4	1 780	8 360	124	28	18
	10	2 100	84,1	135	96,1	166	0,88	0,87	500	650	1,3	1 965	4	9,4	1 780	8 360	124	28	18
	15	2 100	92,4	136	106	167	0,89	0,88	390	510	1,3	1 465	4	9,4	1 780	8 360	124	28	18
	20	2 100	95,2	130	109	159	0,88	0,87	220	290	1,3	694	4	9,4	1 780	8 360	124	28	18
	25	2 100	96,3	125	103	138	0,86	0,84	210	280	1,8	697	4	9,4	1 780	8 360	124	28	18
44	8	2 400	71,9	131	84,4	166	0,86	0,84	761	989	1,6	3 445	3,6	11,9	2 890	8 020	119	23	20
	12	2 400	79,2	131	93	167	0,89	0,87	610	800	1,6	2 297	3,6	11,9	2 890	8 020	119	23	20
	18	2 400	86,9	132	102	169	0,89	0,88	430	550	1,6	1 497	3,6	11,9	2 890	8 020	118	23	20
	24	2 400	92,5	133	103	158	0,88	0,86	290	380	1,6	725	3,6	11,9	2 890	8 020	118	23	20
	30	2 400	91,4	123	102	146	0,85	0,83	190	250	2,1	724	3,6	11,9	2 890	8 020	118	23	20
48	5	2 600	109	241	132	321	0,81	0,76	1 080	1 410	1,9	2 698	7,7	14,2	4 090	23 000	371	54	22
	8	2 600	120	235	138	288	0,86	0,83	889	1 156	1,9	2 583	7,7	14,2	4 090	23 000	371	54	22
	10	2 600	128	238	146	291	0,87	0,85	760	980	1,9	2 405	7,7	14,2	4 090	23 000	371	54	22
	15	2 600	142	243	162	297	0,89	0,88	600	780	1,9	2 072	7,7	14,2	4 090	23 000	371	54	22
	20	2 600	146	231	167	283	0,89	0,88	460	600	1,9	1 423	7,7	14,2	4 090	23 000	371	54	22
	25	2 600	157	246	180	300	0,88	0,87	320	420	1,9	782	7,7	14,2	4 090	23 000	370	54	22
	30	2 600	152	233	174	285	0,87	0,85	344	384	2,5	1 260	7,7	14,2	4 090	23 000	370	54	22
56	12	3 100	117	217	137	276	0,87	0,86	810	1 060	2,4	2 952	6,5	19,3	7 580	21 300	385	46	25
	24	3 100	133	210	157	267	0,89	0,88	410	530	2,4	1 579	6,5	19,3	7 580	21 300	383	46	25
	36	3 100	142	212	159	251	0,86	0,84	290	370	3,2	910	6,5	19,3	7 580	21 300	383	46	25
60	10	3 400	187	390	213	477	0,86	0,83	1 030	1 340	2,7	2 913	12,1	22,2	9 990	52 800	1 100	100	27
	15	3 400	206	391	235	478	0,88	0,87	830	1 080	2,7	2 635	12,1	22,2	9 990	52 800	1 100	100	27
	20	3 400	218	393	249	480	0,89	0,88	700	910	2,7	2 326	12,1	22,2	9 990	52 800	1 100	100	27
64	12	3 650	–	–	166	382	0,87	0,84	930	1 200	3	3 328	11,3	25,3	12 900	50 200	984	46	29
	18	3 650	177	363	186	391	0,89	0,87	790	1 030	3	2 900	11,3	25,3	12 900	50 200	914	54	29
	24	3 650	184	345	193	371	0,89	0,88	640	840	3	2 318	11,3	25,3	12 900	50 200	911	54	29
	30	3 650	178	310	199	366	0,89	0,87	440	570	3	1 292	11,3	25,3	12 900	50 200	771	69	29
	36	3 650	173	295	193	348	0,88	0,86	350	450	3	892	11,3	25,3	12 900	50 200	771	69	29

[1] Standard number of rollers. Configuration not available for certain sizes
[2] Maximum number of rollers on request

www.lmotion.ru lmotion-mail@ya.ru Тел.:(495) 921-34-60

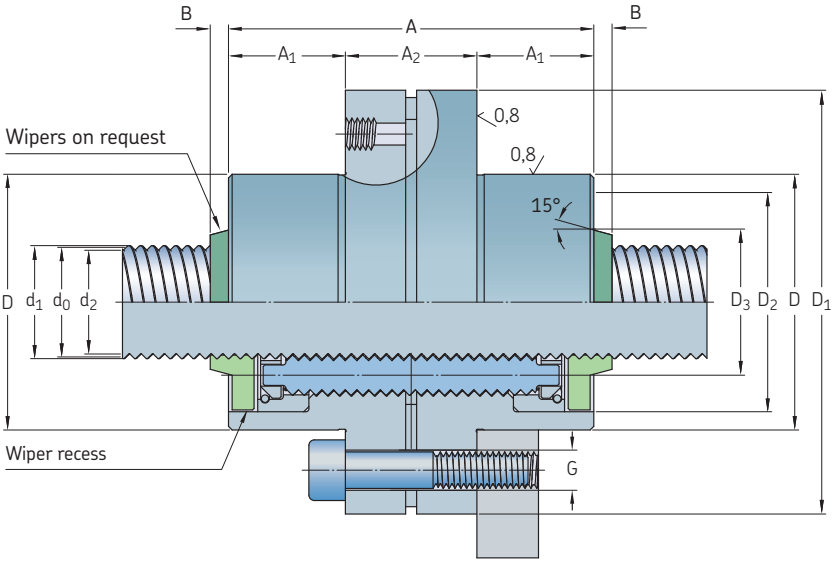

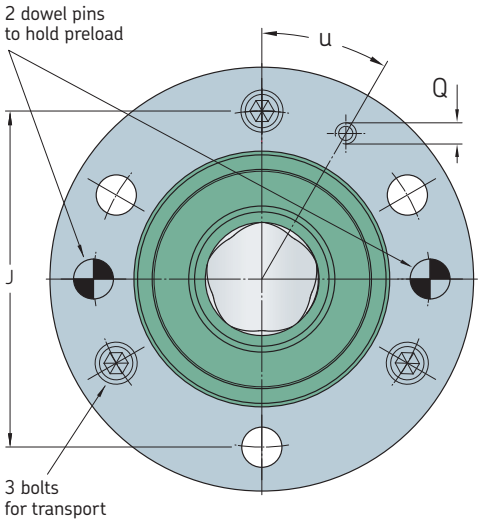

Designation	Dimensions													
	d_1	d_2	D g6/H7	A h12	A_1	A_2	D_1	J js12	G	Q	B	D_2	D_3	u
–	mm													°
PRK 39 × 5	39,4	38,4	82	100	33,5	33	124	102	6 × M10	M6	8	73	50	30
PRK 39 × 10	39,8	37,9	82	100	33,5	33	124	102	6 × M10	M6	8	73	50	30
PRK 39 × 15	40,2	37,3	82	100	33,5	33	124	102	6 × M10	M6	8	73	50	30
PRK 39 × 20	40,5	36,7	82	100	33,5	33	124	102	6 × M10	M6	8	73	50	30
PRK 39 × 25	40,9	36,1	82	100	33,5	33	124	102	6 × M10	M6	8	73	50	30
PRK 44 × 8	44,5	43,2	82	90	28,5	33	124	102	6 × M10	M6	8	74	56	30
PRK 44 × 12	44,8	42,8	82	90	28,5	33	124	102	6 × M10	M6	8	74	56	30
PRK 44 × 18	45,2	42,3	82	90	28,5	33	124	102	6 × M10	M6	8	74	56	30
PRK 44 × 24	45,5	41,7	82	90	28,5	33	124	102	6 × M10	M6	8	74	56	30
PRK 44 × 30	45,9	41,1	82	90	28,5	33	124	102	6 × M10	M6	8	74	56	30
PRK 48 × 5	48,4	47,4	105	127	45	37	150	127	6 × M12	M8 × 1	9	90	60	30
PRK 48 × 8	48,6	47,1	105	127	45	37	150	127	6 × M12	M8 × 1	9	90	60	30
PRK 48 × 10	48,8	46,9	105	127	45	37	150	127	6 × M12	M8 × 1	9	90	60	30
PRK 48 × 15	49,2	46,3	105	127	45	37	150	127	6 × M12	M8 × 1	9	90	60	30
PRK 48 × 20	49,5	45,8	105	127	45	37	150	127	6 × M12	M8 × 1	9	90	60	30
PRK 48 × 25	49,9	45,2	105	127	45	37	150	127	6 × M12	M8 × 1	9	90	60	30
PRK 48 × 30	50,3	44,6	105	127	45	37	150	127	6 × M13	M8 × 2	9	90	60	30
PRK 56 × 12	56,8	54,9	105	112	37,5	37	150	127	6 × M12	M8 × 1	9	93	66	30
PRK 56 × 24	57,5	53,8	105	112	37,5	37	150	127	6 × M12	M8 × 1	9	93	66	30
PRK 56 × 36	58,3	52,5	105	112	37,5	37	150	127	6 × M12	M8 × 1	9	93	66	30
PRK 60 × 10	60,8	58,9	122	152	53,5	45	180	150	6 × M16	M8 × 1	9	110	71	30
PRK 60 × 15	61,2	58,4	122	152	53,5	45	180	150	6 × M16	M8 × 1	9	110	71	30
PRK 60 × 20	61,5	57,8	122	152	53,5	45	180	150	6 × M16	M8 × 1	9	110	71	30
PRK 64 × 12	64,8	62,9	120	129	42	45	180	150	6 × M16	M8 × 1	11	106	75	30
PRK 64 × 18	65,2	62,3	120	129	42	45	180	150	6 × M16	M8 × 1	11	106	75	30
PRK 64 × 24	65,5	61,8	120	129	42	45	180	150	6 × M16	M8 × 1	11	106	75	30
PRK 64 × 30	65,9	61,2	120	129	42	45	180	150	6 × M16	M8 × 1	11	106	75	30
PRK 64 × 36	66,3	60,6	120	129	42	45	180	150	6 × M16	M8 × 1	11	106	75	30

www.lmotion.ru lmotion-mail@ya.ru Тел.:(495) 921-34-60

Ultra Power roller screws HR

The Ultra Power roller screws represent the strongest variant of the SKF planetary roller screw product line. They are designed for heavy loads and long service life.

The SKF Ultra Power assortment of planetary roller screws is optimized to provide a load carrying capacity increase up to 60% over the standard SR planetary roller screw with the same combination of diameter and lead, and, in addition, to reach the maximum possible service life within a compact space.

In order to operate within the principles of rolling fatigue and attain the L_{10} life performance, the maximum cycle operating load should not exceed 80% of the C_a value.

The maximum load should be applied on the nut flange, not on the mounting bolts.

Roller screws without backlash or with preloaded split nut are not available in this assortment.

Application examples

The Ultra Power roller screws offer the power of hydraulic actuators combined with the precision and flexibility of electric control:

- Injection moulding machines for plastic and rubber
- Electro–mechanical presses
- Broaching machines
- Large machine tools
- Off–highway vehicles
- Oil & gas equipment
- Steel industry including casting and rolling
- Friction welding
- Hydro–electric power plants
- Powerful electro–mechanical cylinders
- Heavy lifting equipment

Design features	User benefits
Planetary roller screw concept with maximized load rating	Highest possible load carrying capacity of any type of rolling screw Reliability, resistance to shock loads, robustness in harsh environments
Nominal diameters from 60 mm to 240 mm	Wide standard assortment to fit most heavy duty applications
Long leads up to 50 mm	High linear speed capability with long lead (1,2 m/s for size 112,5 × 50)
Shaft lengths up to 8 000 mm for diameters 120 and 135 mm	For additional information about longer shaft lengths, please contact your local SKF representative
Maximum n d_0 = 160 000	High speed for increased productivity
High dynamic load carrying capacity up to 3 994 kN for HR assortment	Long service life
High static load carrying capacity up to 23 350 kN for HR assortment	Ability to accommodate heavy shock loads without raceway damage
Ultra Power roller screws is available with axial play lower than 0,07 mm (0,1 mm for screws with lead ≥ 40 mm)	Unique combination of extreme load carrying capacity and driving accuracy
Standard versions include wipers (WPR in the designation). Screws can be delivered without wipers on request (designation with NOWPR suffix)	Solution contributes to long service life
Standard lead precision is G5, lead precision G3 or G1 on request	Precise driving accuracy
Optional support bearings	Wide variety of spherical roller thrust bearing combinations
Three standard versions are available: • HRC: cylindrical nut • HRF: nut with centered flange • HRP: nut with off–centered flange	Increased design flexibility
Adaptable tooling for non–standard, left hand threads or special designs	Custom solutions on request. Please contact your SKF sales office for specific requirements and their feasibility

www.lmotion.ru lmotion-mail@ya.ru Тел.:(495) 921-34-60

www.lmotion.ru lmotion-mail@ya.ru Тел.:(495) 921-34-60

Standard HRC

Threaded rollers

Components assembly

Dimensions and technical characteristics

d_0	P_h	L_{tp}	C_a	C_{0a}	η	η'	S_{ap}	m_n	m_s	l_s	I_{nn}	I_{ns}	Z_n	Z_s
mm			kN		–		mm	kg	kg/m	kgmm²/m	kgmm²		cm³	cm³/m
60	15	4 250	494	1 206	0,88	0,87	0,07	9	22,2	9 990	18 700	1 680	90	27
	20	4 250	515	1 181	0,89	0,88	0,07	9	22,2	9 990	18 700	1 680	90	27
	25	4 250	530	1 227	0,89	0,88	0,07	9	22,2	9 990	18 700	1 680	90	27
	30	4 250	528	1 216	0,88	0,87	0,07	9	22,2	9 990	18 700	1 680	90	27
75	15	5 500	836	2 473	0,87	0,85	0,07	16	34,7	24 400	51 700	5 130	170	33
	20	5 500	845	2 455	0,88	0,87	0,07	16	34,7	24 400	51 700	5 130	170	33
	25	5 500	855	2 461	0,89	0,88	0,07	16	34,7	24 400	51 700	5 130	170	33
	30	5 500	852	2 420	0,89	0,88	0,07	16	34,7	24 400	51 700	5 130	170	33
87	15	6 000	1 059	3 527	0,86	0,84	0,07	26	45,8	42 800	111 000	10 600	270	38
	20	6 000	1 061	3 452	0,88	0,86	0,07	26	45,8	42 800	111 000	10 600	270	38
	25	6 000	1 085	3 513	0,89	0,87	0,07	26	45,8	42 800	111 000	10 600	270	38
	30	6 000	1 085	3 465	0,89	0,88	0,07	26	45,8	42 800	111 000	10 600	270	38
99	15	7 500	1 277	4 671	0,85	0,82	0,07	40	60,4	74 000	220 000	20 400	400	44
	20	7 500	1 311	4 741	0,87	0,85	0,07	40	60,4	74 000	220 000	20 400	400	44
	25	7 500	1 328	4 749	0,88	0,87	0,07	40	60,4	74 000	220 000	20 400	400	44
	30	7 500	1 330	4 694	0,89	0,87	0,07	40	60,4	74 000	220 000	20 400	400	44
	35	7 500	1 329	4 639	0,89	0,88	0,07	40	60,4	74 000	220 000	20 400	400	44
112,5	15	7 500	1 396	5 288	0,84	0,80	0,07	58	76,8	120 000	423 000	37 100	550	50
	20	7 500	1 421	5 297	0,86	0,84	0,07	58	76,8	120 000	423 000	37 100	550	50
	25	7 500	1 446	5 341	0,88	0,86	0,07	58	76,8	120 000	423 000	37 100	550	50
	30	7 500	1 455	5 315	0,88	0,87	0,07	58	76,8	120 000	423 000	37 100	550	50
	35	7 500	1 461	5 289	0,89	0,88	0,07	58	76,8	120 000	423 000	37 100	550	50
120	15	8 000	1 547	6 179	0,83	0,79	0,07	64	88,8	160 000	516 000	47 200	700	53
	20	8 000	1 587	6 263	0,86	0,83	0,07	64	88,8	160 000	516 000	47 200	700	53
	25	8 000	1 585	6 123	0,87	0,85	0,07	64	88,8	160 000	516 000	47 200	700	53
	30	8 000	1 614	6 207	0,88	0,87	0,07	64	88,8	160 000	516 000	47 200	700	53
	35	8 000	1 640	6 291	0,89	0,87	0,07	64	88,8	160 000	516 000	47 200	700	53
	40	8 000	1 651	6 301	0,89	0,88	0,1	64	88,8	160 000	516 000	47 200	700	53

www.lmotion.ru lmotion-mail@ya.ru Тел.:(495) 921-34-60

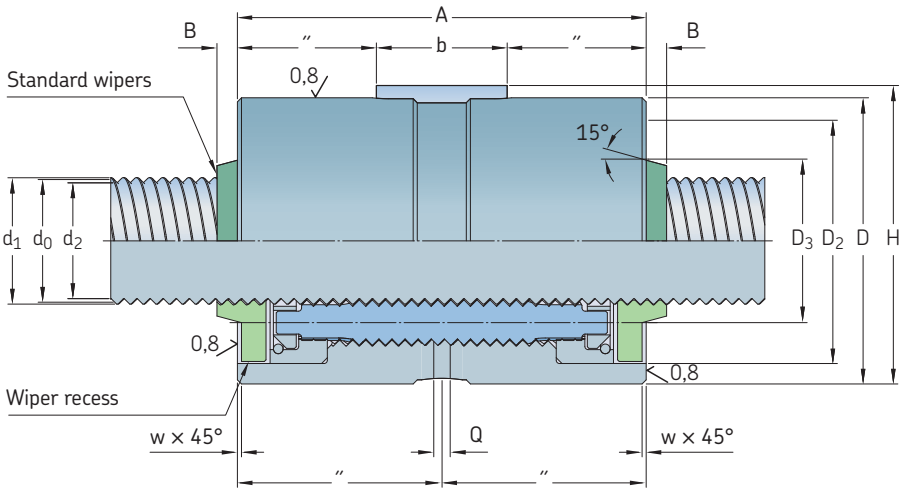

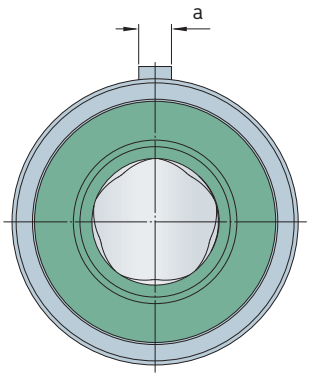

Designation	Dimensions											
	d_1	d_2	D g6/H7	A	w	a h9	b	H	Q	B	D_2	D_3
–	mm											
HRC 60 × 15	61,2	58,4	122	171	1	10	56	125	11	9	110	71
HRC 60 × 20	61,5	57,9	122	171	1	10	56	125	11	9	110	71
HRC 60 × 25	61,9	57,3	122	171	1	10	56	125	11	9	110	71
HRC 60 × 30	62,3	56,8	122	171	1	10	56	125	11	9	110	71
HRC 75 × 15	76,2	73,4	150	213	1	10	63	153	11	10	136	87
HRC 75 × 20	76,5	72,9	150	213	1	10	63	153	11	10	136	87
HRC 75 × 25	76,9	72,3	150	213	1	10	63	153	11	10	136	87
HRC 75 × 30	77,3	71,8	150	213	1	10	63	153	11	10	136	87
HRC 87 × 15	88,2	85,4	175	245	1,5	12	100	178	12	12	158	103
HRC 87 × 20	88,5	84,9	175	245	1,5	12	100	178	12	12	158	103
HRC 87 × 25	88,9	84,4	175	245	1,5	12	100	178	12	12	158	103
HRC 87 × 30	89,3	83,8	175	245	1,5	12	100	178	12	12	158	103
HRC 99 × 15	100,2	97,4	200	280	1,5	16	100	204	15	12	180	112
HRC 99 × 20	100,5	96,9	200	280	1,5	16	100	204	15	12	180	112
HRC 99 × 25	100,9	96,4	200	280	1,5	16	100	204	15	12	180	112
HRC 99 × 30	101,3	95,9	200	280	1,5	16	100	204	15	12	180	112
HRC 99 × 35	101,7	95,3	200	280	1,5	16	100	204	15	12	180	112
HRC 112.5 × 15	113,7	110,9	230	300	1,5	16	100	234	15	12	210	140
HRC 112.5 × 20	114	110,4	230	300	1,5	16	100	234	15	12	210	140
HRC 112.5 × 25	114,4	109,9	230	300	1,5	16	100	234	15	12	210	140
HRC 112.5 × 30	114,8	109,4	230	300	1,5	16	100	234	15	12	210	140
HRC 112.5 × 35	115,2	108,9	230	300	1,5	16	100	234	15	12	210	140
HRC 120 × 15	121,2	118,4	240	330	1,5	16	100	244	15	12	220	180
HRC 120 × 20	121,5	117,9	240	330	1,5	16	100	244	15	12	220	180
HRC 120 × 25	121,9	117,4	240	330	1,5	16	100	244	15	12	220	180
HRC 120 × 30	122,3	116,9	240	330	1,5	16	100	244	15	12	220	180
HRC 120 × 35	122,7	116,4	240	330	1,5	16	100	244	15	12	220	180
HRC 120 × 40	123	115,8	240	330	1,5	16	100	244	15	12	220	180

www.lmotion.ru lmotion-mail@ya.ru Тел.:(495) 921-34-60

Standard HRC

Threaded rollers

Components assembly

Dimensions and technical characteristics

d_0	P_h	L_{tp}	C_a	C_{0a}	η	η'	S_{ap}	m_n	m_s	I_s	I_{nn}	I_{ns}	Z_n	Z_s
mm			kN		–		mm	kg	kg/m	kgmm²/m	kgmm²		cm^3	cm^3/m
135	15	8 000	1 843	8 037	0,82	0,77	0,07	108	113	261 000	$1{,}18 \times 10^6$	94 200	980	60
	20	8 000	1 858	7 922	0,85	0,82	0,07	108	113	261 000	$1{,}18 \times 10^6$	94 200	980	60
	25	8 000	1 903	8 059	0,86	0,84	0,07	108	113	261 000	$1{,}18 \times 10^6$	94 200	980	60
	30	8 000	1 904	7 943	0,88	0,86	0,07	108	113	261 000	$1{,}18 \times 10^6$	94 200	980	60
	35	8 000	1 921	7 953	0,88	0,87	0,07	108	113	261 000	$1{,}18 \times 10^6$	94 200	980	60
	40	8 000	1 909	7 796	0,89	0,87	0,1	108	113	261 000	$1{,}18 \times 10^6$	94 200	980	60
	50	8 000	1 944	7 901	0,89	0,88	0,1	108	113	261 000	$1{,}18 \times 10^6$	94 200	980	60
150	15	7 200	2 200	10 446	0,8	0,75	0,07	163	139	390 000	$2{,}35 \times 10^6$	160 000	1 350	66
	20	7 200	2 240	10 459	0,84	0,80	0,07	163	139	390 000	$2{,}35 \times 10^6$	160 000	1 350	66
	25	7 200	2 137	9 553	0,86	0,83	0,07	163	139	390 000	$2{,}35 \times 10^6$	160 000	1 350	66
	30	7 200	2 167	9 611	0,87	0,85	0,07	163	139	390 000	$2{,}35 \times 10^6$	160 000	1 350	66
	35	7 200	2 167	9 483	0,88	0,86	0,07	163	139	390 000	$2{,}35 \times 10^6$	160 000	1 350	66
	40	7 200	2 176	9 449	0,88	0,87	0,1	163	139	390 000	$2{,}35 \times 10^6$	160 000	1 350	66
	50	7 200	2 189	9 379	0,89	0,88	0,1	163	139	390 000	$2{,}35 \times 10^6$	160 000	1 350	66
180	15	5 000	3 073	17 366	0,78	0,71	0,07	310	200	809 000	$6{,}54 \times 10^6$	437 000	2 500	79
	20	5 000	3 123	17 319	0,82	0,77	0,07	310	200	809 000	$6{,}54 \times 10^6$	437 000	2 500	79
	25	5 000	3 002	16 004	0,84	0,81	0,07	310	200	809 000	$6{,}54 \times 10^6$	437 000	2 500	79
	30	5 000	3 009	15 790	0,86	0,83	0,07	310	200	809 000	$6{,}54 \times 10^6$	437 000	2 500	79
	35	5 000	3 023	15 690	0,87	0,85	0,07	310	200	809 000	$6{,}54 \times 10^6$	437 000	2 500	79
	40	5 000	3 075	15 931	0,88	0,86	0,1	310	200	809 000	$6{,}54 \times 10^6$	437 000	2 500	79
	50	5 000	3 128	16 073	0,89	0,87	0,1	310	200	809 000	$6{,}54 \times 10^6$	437 000	2 500	79
210	20	3 700	3 371	19 164	0,80	0,74	0,07	416	270	$1{,}49 \times 10^6$	$11{,}2 \times 10^6$	854 000	3 150	92
	25	3 700	3 435	19 324	0,82	0,79	0,07	416	270	$1{,}49 \times 10^6$	$11{,}2 \times 10^6$	854 000	3 150	92
	30	3 700	3 249	17 472	0,84	0,81	0,07	416	270	$1{,}49 \times 10^6$	$11{,}2 \times 10^6$	854 000	3 150	92
	35	3 700	3 265	17 359	0,86	0,83	0,07	416	270	$1{,}49 \times 10^6$	$11{,}2 \times 10^6$	854 000	3 150	92
	40	3 700	3 322	17 635	0,87	0,85	0,1	416	270	$1{,}49 \times 10^6$	$11{,}2 \times 10^6$	854 000	3 150	92
	50	3 700	3 381	17 798	0,88	0,86	0,1	416	270	$1{,}49 \times 10^6$	$11{,}2 \times 10^6$	854 000	3 150	92
240	25	2 800	3 919	23 387	0,81	0,76	0,07	533	353	$2{,}54 \times 10^6$	17×10^6	$1{,}19 \times 10^6$	5 000	106
	30	2 800	3 931	23 089	0,83	0,79	0,07	533	353	$2{,}54 \times 10^6$	17×10^6	$1{,}19 \times 10^6$	5 000	106
	35	2 800	3 994	23 350	0,84	0,82	0,07	533	353	$2{,}54 \times 10^6$	17×10^6	$1{,}19 \times 10^6$	5 000	106
	40	2 800	3 808	21 497	0,86	0,83	0,1	533	353	$2{,}54 \times 10^6$	17×10^6	$1{,}19 \times 10^6$	5 000	106
	50	2 800	3 860	21 536	0,87	0,85	0,1	533	353	$2{,}54 \times 10^6$	17×10^6	$1{,}19 \times 10^6$	5 000	106

www.lmotion.ru lmotion-mail@ya.ru Тел.:(495) 921-34-60

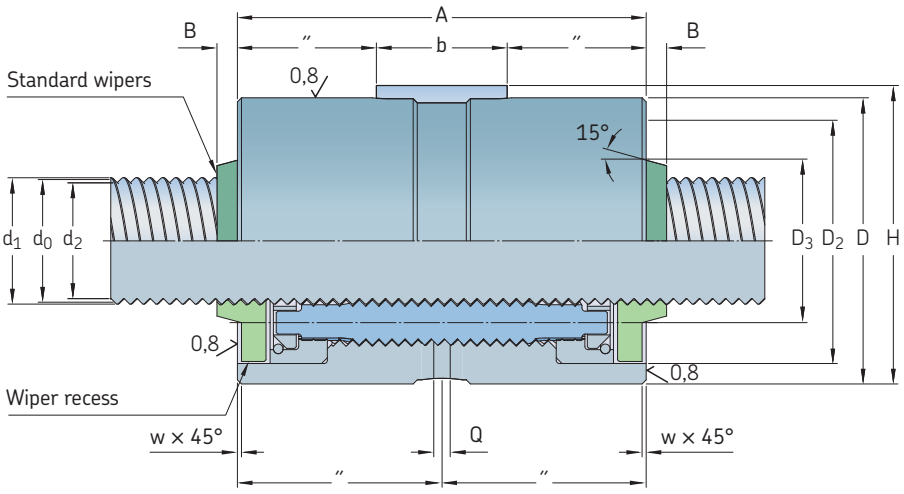

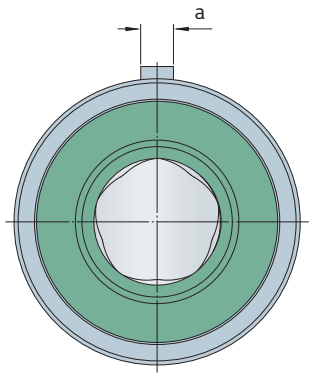

Designation	Dimensions											
	d_1	d_2	D g6/H7	A	w	a h9	b	H	Q	B	D_2	D_3
–	mm											
HRC 135 × 15	136,2	133,4	280	370	2	28	120	286	15	11,5	250	180
HRC 135 × 20	136,5	133	280	370	2	28	120	286	15	11,5	250	180
HRC 135 × 25	136,9	132,5	280	370	2	28	120	286	15	11,5	250	180
HRC 135 × 30	137,3	131,9	280	370	2	28	120	286	15	11,5	250	180
HRC 135 × 35	137,7	131,4	280	370	2	28	120	286	15	11,5	250	180
HRC 135 × 40	138	130,9	280	370	2	28	120	286	15	11,5	250	180
HRC 135 × 50	138,8	129,8	280	370	2	28	120	286	15	11,5	250	180
HRC 150 × 15	151,2	148,4	320	412	3	32	160	327	15	12,5	280	230
HRC 150 × 20	151,5	148	320	412	3	32	160	327	15	12,5	280	230
HRC 150 × 25	151,9	147,5	320	412	3	32	160	327	15	12,5	280	230
HRC 150 × 30	152,3	147	320	412	3	32	160	327	15	12,5	280	230
HRC 150 × 35	152,7	146,4	320	412	3	32	160	327	15	12,5	280	230
HRC 150 × 40	153	145,9	320	412	3	32	160	327	15	12,5	280	230
HRC 150 × 50	153,8	144,8	320	412	3	32	160	327	15	12,5	280	230
HRC 180 × 15	181,2	178,5	390	528	3	32	160	397	20	15	340	250
HRC 180 × 20	181,5	178	390	528	3	32	160	397	20	15	340	250
HRC 180 × 25	181,9	177,5	390	528	3	32	160	397	20	15	340	250
HRC 180 × 30	182,3	177	390	528	3	32	160	397	20	15	340	250
HRC 180 × 35	182,7	176,5	390	528	3	32	160	397	20	15	340	250
HRC 180 × 40	183	176	390	528	3	32	160	397	20	15	340	250
HRC 180 × 50	183,8	174,9	390	528	3	32	160	397	20	15	340	250
HRC 210 × 20	211,5	208	440	570	3	40	200	450	20	15	398	250
HRC 210 × 25	211,9	207,5	440	570	3	40	200	450	20	15	398	250
HRC 210 × 30	212,3	207	440	570	3	40	200	450	20	15	398	250
HRC 210 × 35	212,7	206,5	440	570	3	40	200	450	20	15	398	250
HRC 210 × 40	213	206	440	570	3	40	200	450	20	15	398	250
HRC 210 × 50	213,8	205	440	570	3	40	200	450	20	15	398	250
HRC 240 × 25	241,9	237,5	490	600	3	50	200	501	20	15	448	290
HRC 240 × 30	242,3	237	490	600	3	50	200	501	20	15	448	290
HRC 240 × 35	242,7	236,5	490	600	3	50	200	501	20	15	448	290
HRC 240 × 40	243	236,1	490	600	3	50	200	501	20	15	448	290
HRC 240 × 50	243,8	235	490	600	3	50	200	501	20	15	448	290

www.lmotion.ru lmotion-mail@ya.ru Тел.:(495) 921-34-60

HRP

Threaded rollers

Components assembly

Dimensions and technical characteristics

d_0	P_h	L_{tp}	C_a	C_{0a}	η	η'	S_{ap}	m_n	m_s	l_s	I_{nn}	I_{ns}	Z_n	Z_s
mm			kN		–		mm	kg	kg/m	kgmm²/m	kgmm²		cm³	cm³/m
60	15	4 250	495	1 206	0,88	0,87	0,07	13	22,2	9 990	29 700	1 680	90	27
	20	4 250	515	1 181	0,89	0,88	0,07	13	22,2	9 990	29 700	1 680	90	27
	25	4 250	530	1 227	0,89	0,88	0,07	13	22,2	9 990	29 700	1 680	90	27
	30	4 250	528	1 216	0,88	0,87	0,07	13	22,2	9 990	29 700	1 680	90	27
75	15	5 500	836	2 473	0,87	0,85	0,07	20	34,7	24 400	73 400	5 130	170	33
	20	5 500	845	2 455	0,88	0,87	0,07	20	34,7	24 400	73 400	5 130	170	33
	25	5 500	855	2 461	0,89	0,88	0,07	20	34,7	24 400	73 400	5 130	170	33
	30	5 500	852	2 420	0,89	0,88	0,07	20	34,7	24 400	73 400	5 130	170	33
87	15	6 000	1 059	3 527	0,86	0,84	0,07	31	45,8	42 800	149 000	10 600	270	38
	20	6 000	1 061	3 452	0,88	0,86	0,07	31	45,8	42 800	149 000	10 600	270	38
	25	6 000	1 085	3 513	0,89	0,87	0,07	31	45,8	42 800	149 000	10 600	270	38
	30	6 000	1 085	3 465	0,89	0,88	0,07	31	45,8	42 800	149 000	10 600	270	38
99	15	7 500	1 277	4 671	0,85	0,82	0,07	46	60,4	74 000	288 000	20 400	400	44
	20	7 500	1 311	4 741	0,87	0,85	0,07	46	60,4	74 000	288 000	20 400	400	44
	25	7 500	1 328	4 749	0,88	0,87	0,07	46	60,4	74 000	288 000	20 400	400	44
	30	7 500	1 330	4 694	0,89	0,87	0,07	46	60,4	74 000	288 000	20 400	400	44
	35	7 500	1 329	4 639	0,89	0,88	0,07	46	60,4	74 000	288 000	20 400	400	44
112,5	15	7 500	1 396	5 288	0,84	0,80	0,07	66	76,8	120 000	552 000	37 100	550	50
	20	7 500	1 421	5 297	0,86	0,84	0,07	66	76,8	120 000	552 000	37 100	550	50
	25	7 500	1 446	5 341	0,88	0,86	0,07	66	76,8	120 000	552 000	37 100	550	50
	30	7 500	1 455	5 315	0,88	0,87	0,07	66	76,8	120 000	552 000	37 100	550	50
	35	7 500	1 461	5 289	0,89	0,88	0,07	66	76,8	120 000	552 000	37 100	550	50
120	15	8 000	1 547	6 179	0,83	0,79	0,07	73	88,8	160 000	676 000	47 200	700	53
	20	8 000	1 587	6 263	0,86	0,83	0,07	73	88,8	160 000	676 000	47 200	700	53
	25	8 000	1 585	6 123	0,87	0,85	0,07	73	88,8	160 000	676 000	47 200	700	53
	30	8 000	1 614	6 207	0,88	0,87	0,07	73	88,8	160 000	676 000	47 200	700	53
	35	8 000	1 640	6 291	0,89	0,87	0,07	73	88,8	160 000	676 000	47 200	700	53
	40	8 000	1 651	6 301	0,89	0,88	0,1	73	88,8	160 000	676 000	47 200	700	53

www.lmotion.ru lmotion-mail@ya.ru Тел.:(495) 921-34-60

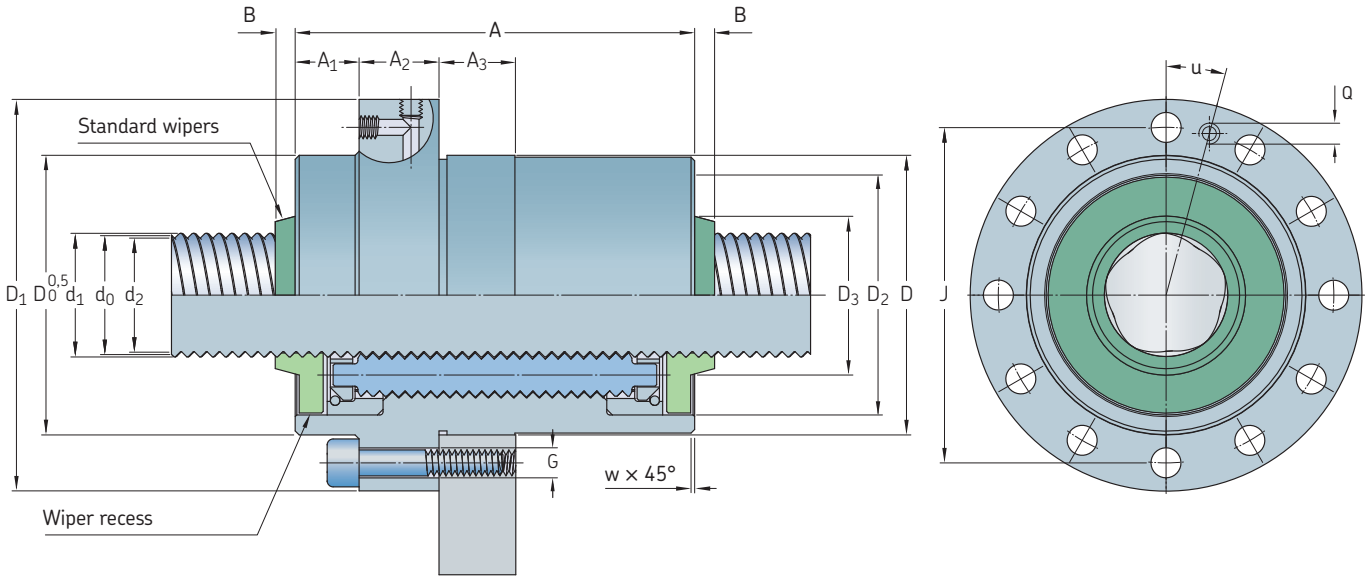

Designation	Dimensions																
	d_1	d_2	D g6/H7	A h12	A_1 HRF	A_1 HRP	A_3	A_2	D_1	J js12	G	w	Q	B	D_2	D_3	u
–	mm																°
HRF/HRP 60 × 15	61,2	58,4	122	171	70,5	25	40	30	166	146	8 × M12	1	M8 × 1	9	110	71	22,5
HRF/HRP 60 × 20	61,5	57,9	122	171	70,5	25	40	30	166	146	8 × M12	1	M8 × 1	9	110	71	22,5
HRF/HRP 60 × 25	61,9	57,3	122	171	70,5	25	40	30	166	146	8 × M12	1	M8 × 1	9	110	71	22,5
HRF/HRP 60 × 30	62,3	56,8	122	171	70,5	25	40	30	166	146	8 × M12	1	M8 × 1	9	110	71	22,5
HRF/HRP 75 × 15	76,1	73,5	150	213	89	30	40	35	195	174	12 × M12	1	M8 × 1	10	136	87	15
HRF/HRP 75 × 20	76,4	71	150	213	89	30	40	35	195	174	12 × M12	1	M8 × 1	10	136	87	15
HRF/HRP 75 × 25	76,7	70	150	213	89	30	40	35	195	174	12 × M12	1	M8 × 1	10	136	87	15
HRF/HRP 75 × 30	76,9	68,9	150	213	89	30	40	35	195	174	12 × M12	1	M8 × 1	10	136	87	15
HRF/HRP 87 × 15	88,1	85,5	175	245	102,5	35	40	40	220	200	12 × M12	1,5	M8 × 1	12	158	103	15
HRF/HRP 87 × 20	88,4	83	175	245	102,5	35	40	40	220	200	12 × M12	1,5	M8 × 1	12	158	103	15
HRF/HRP 87 × 25	88,7	82	175	245	102,5	35	40	40	220	200	12 × M12	1,5	M8 × 1	12	158	103	15
HRF/HRP 87 × 30	89	81	175	245	102,5	35	40	40	220	200	12 × M12	1,5	M8 × 1	12	158	103	15
HRF/HRP 99 × 15	100,1	97,5	200	280	115	40	40	50	245	224	12 × M12	1,5	M8 × 1	12	180	112	15
HRF/HRP 99 × 20	100,4	95	200	280	115	40	40	50	245	224	12 × M12	1,5	M8 × 1	12	180	112	15
HRF/HRP 99 × 25	100,7	94	200	280	115	40	40	50	245	224	12 × M12	1,5	M8 × 1	12	180	112	15
HRF/HRP 99 × 30	101	93	200	280	115	40	40	50	245	224	12 × M12	1,5	M8 × 1	12	180	112	15
HRF/HRP 99 × 35	101,3	91,9	200	280	115	40	40	50	245	224	12 × M12	1,5	M8 × 1	12	180	112	15
HRF/HRP 112,5 × 15	113,6	111,1	230	300	125	50	40	50	286	260	12 × M16	1,5	M12 × 1,75	12	210	140	15
HRF/HRP 112,5 × 20	113,9	108,6	230	300	125	50	40	50	286	260	12 × M16	1,5	M12 × 1,75	12	210	140	15
HRF/HRP 112,5 × 25	114,2	107,5	230	300	125	50	40	50	286	260	12 × M16	1,5	M12 × 1,75	12	210	140	15
HRF/HRP 112,5 × 30	114,5	106,5	230	300	125	50	40	50	286	260	12 × M16	1,5	M12 × 1,75	12	210	140	15
HRF/HRP 112,5 × 35	114,8	105,5	230	300	125	50	40	50	286	260	12 × M16	1,5	M12 × 1,75	12	210	140	15
HRF/HRP 120 × 15	121,1	118,6	240	330	137,5	50	60	55	296	270	12 × M16	1,5	M12 × 1,75	12	220	180	15
HRF/HRP 120 × 20	121,4	116,1	240	330	137,5	50	60	55	296	270	12 × M16	1,5	M12 × 1,75	12	220	180	15
HRF/HRP 120 × 25	121,8	115,1	240	330	137,5	50	60	55	296	270	12 × M16	1,5	M12 × 1,75	12	220	180	15
HRF/HRP 120 × 30	122,1	114	240	330	137,5	50	60	55	296	270	12 × M16	1,5	M12 × 1,75	12	220	180	15
HRF/HRP 120 × 35	122,3	113	240	330	137,5	50	60	55	296	270	12 × M16	1,5	M12 × 1,75	12	220	180	15
HRF/HRP 120 × 40	122,6	112	240	330	137,5	50	60	55	296	270	12 × M16	1,5	M12 × 1,75	12	220	180	15

www.lmotion.ru lmotion-mail@ya.ru Тел.:(495) 921-34-60

HRP

Threaded rollers

Components assembly

Dimensions and technical characteristics

d_0	P_h	L_{tp}	C_a	C_{0a}	η	η'	S_{ap}	m_n	m_s	I_s	I_{nn}	I_{ns}	Z_n	Z_s
mm			kN		–		mm	kg	kg/m	kgmm²/m	kgmm²		cm³	cm³/m
135	15	8 000	1 843	8 037	0,82	0,77	0,07	122	113	261 000	$1,5 \times 10^6$	94 200	980	60
	20	8 000	1 858	7 922	0,85	0,82	0,07	122	113	261 000	$1,5 \times 10^6$	94 200	980	60
	25	8 000	1 903	8 059	0,86	0,84	0,07	122	113	261 000	$1,5 \times 10^6$	94 200	980	60
	30	8 000	1 904	7 943	0,88	0,86	0,07	122	113	261 000	$1,5 \times 10^6$	94 200	980	60
	35	8 000	1 921	7 953	0,88	0,87	0,07	122	113	261 000	$1,5 \times 10^6$	94 200	980	60
	40	8 000	1 909	7 796	0,89	0,87	0,1	122	113	261 000	$1,5 \times 10^6$	94 200	980	60
	50	8 000	1 944	7 901	0,89	0,88	0,1	122	113	261 000	$1,5 \times 10^6$	94 200	980	60
150	15	7 200	2 200	10 446	0,80	0,75	0,07	180	139	390 000	$2,9 \times 10^6$	160 000	1 350	66
	20	7 200	2 240	10 459	0,84	0,80	0,07	180	139	390 000	$2,9 \times 10^6$	160 000	1 350	66
	25	7 200	2 137	9 553	0,86	0,83	0,07	180	139	390 000	$2,9 \times 10^6$	160 000	1 350	66
	30	7 200	2 167	9 611	0,87	0,85	0,07	180	139	390 000	$2,9 \times 10^6$	160 000	1 350	66
	35	7 200	2 167	9 483	0,88	0,86	0,07	180	139	390 000	$2,9 \times 10^6$	160 000	1 350	66
	40	7 200	2 176	9 449	0,88	0,87	0,1	180	139	390 000	$2,9 \times 10^6$	160 000	1 350	66
	50	7 200	2 189	9 379	0,89	0,88	0,1	180	139	390 000	$2,9 \times 10^6$	160 000	1 350	66
180	15	5 000	3 073	17 366	0,78	0,71	0,07	344	200	809 000	$8,2 \times 10^6$	437 000	2 500	79
	20	5 000	3 123	17 319	0,82	0,77	0,07	344	200	809 000	$8,2 \times 10^6$	437 000	2 500	79
	25	5 000	3 002	16 004	0,84	0,81	0,07	344	200	809 000	$8,2 \times 10^6$	437 000	2 500	79
	30	5 000	3 009	15 790	0,86	0,83	0,07	344	200	809 000	$8,2 \times 10^6$	437 000	2 500	79
	35	5 000	3 023	15 690	0,87	0,85	0,07	344	200	809 000	$8,2 \times 10^6$	437 000	2 500	79
	40	5 000	3 075	15 931	0,88	0,86	0,1	344	200	809 000	$8,2 \times 10^6$	437 000	2 500	79
	50	5 000	3 128	16 073	0,89	0,87	0,1	344	200	809 000	$8,2 \times 10^6$	437 000	2 500	79
210	20	3 700	3 371	19 164	0,80	0,74	0,07	465	270	$1,49 \times 10^6$	$14,1 \times 10^6$	854 000	3 150	92
	25	3 700	3 435	19 324	0,82	0,79	0,07	465	270	$1,49 \times 10^6$	$14,1 \times 10^6$	854 000	3 150	92
	30	3 700	3 249	17 472	0,84	0,81	0,07	465	270	$1,49 \times 10^6$	$14,1 \times 10^6$	854 000	3 150	92
	35	3 700	3 265	17 359	0,86	0,83	0,07	465	270	$1,49 \times 10^6$	$14,1 \times 10^6$	854 000	3 150	92
	40	3 700	3 322	17 635	0,87	0,85	0,1	465	270	$1,49 \times 10^6$	$14,1 \times 10^6$	854 000	3 150	92
	50	3 700	3 381	17 798	0,88	0,86	0,1	465	270	$1,49 \times 10^6$	$14,1 \times 10^6$	854 000	3 150	92
240	25	2 800	3 919	23 387	0,81	0,76	0,07	594	353	$2,54 \times 10^6$	$21,4 \times 10^6$	$1,19 \times 10^6$	5 000	106
	30	2 800	3 931	23 089	0,83	0,79	0,07	594	353	$2,54 \times 10^6$	$21,4 \times 10^6$	$1,19 \times 10^6$	5 000	106
	35	2 800	3 994	23 350	0,84	0,82	0,07	594	353	$2,54 \times 10^6$	$21,4 \times 10^6$	$1,19 \times 10^6$	5 000	106
	40	2 800	3 808	21 497	0,86	0,83	0,1	594	353	$2,54 \times 10^6$	$21,4 \times 10^6$	$1,19 \times 10^6$	5 000	106
	50	2 800	3 860	21 536	0,87	0,85	0,1	594	353	$2,54 \times 10^6$	$21,4 \times 10^6$	$1,19 \times 10^6$	5 000	106

www.lmotion.ru lmotion-mail@ya.ru Тел.:(495) 921-34-60

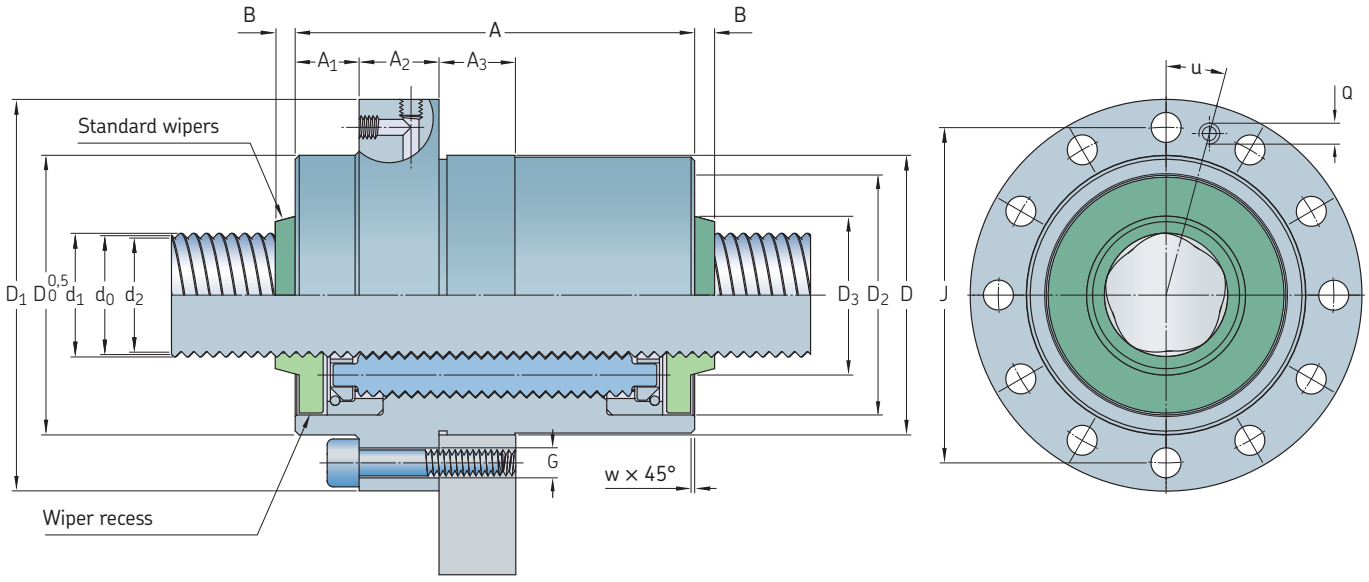

Designation	Dimensions																
	d_1	d_2	D g6/H7	A h12	A_1 HRF	A_1 HRP	A_3	A_2	D_1	J js12	G	w	Q	B	D_2	D_3	u
–	mm																°
HRF/HRP 135 × 15	136,1	133,6	280	370	155	60	80	60	345	315	12 × M18	2	M12 × 1,75	11,5	250	180	15
HRF/HRP 135 × 20	136,5	131,1	280	370	155	60	80	60	345	315	12 × M18	2	M12 × 1,75	11,5	250	180	15
HRF/HRP 135 × 25	136,8	130,1	280	370	155	60	80	60	345	315	12 × M18	2	M12 × 1,75	11,5	250	180	15
HRF/HRP 135 × 30	137,1	129,1	280	370	155	60	80	60	345	315	12 × M18	2	M12 × 1,75	11,5	250	180	15
HRF/HRP 135 × 35	137,4	128	280	370	155	60	80	60	345	315	12 × M18	2	M12 × 1,75	11,5	250	180	15
HRF/HRP 135 × 40	137,7	127	280	370	155	60	80	60	345	315	12 × M18	2	M12 × 1,75	11,5	250	180	15
HRF/HRP 135 × 50	137,7	127	280	370	155	60	80	60	345	315	12 × M18	2	M12 × 1,75	11,5	250	180	15
HRF/HRP 150 × 15	151,1	148,6	320	412	171	65	80	70	385	355	12 × M18	3	M12 × 1,75	12,5	280	230	15
HRF/HRP 150 × 20	151,5	146,1	320	412	171	65	80	70	385	355	12 × M18	3	M12 × 1,75	12,5	280	230	15
HRF/HRP 150 × 25	151,8	145,1	320	412	171	65	80	70	385	355	12 × M18	3	M12 × 1,75	12,5	280	230	15
HRF/HRP 150 × 30	152,1	144,1	320	412	171	65	80	70	385	355	12 × M18	3	M12 × 1,75	12,5	280	230	15
HRF/HRP 150 × 35	152,4	143,1	320	412	171	65	80	70	385	355	12 × M18	3	M12 × 1,75	12,5	280	230	15
HRF/HRP 150 × 40	152,7	142	320	412	171	65	80	70	385	355	12 × M18	3	M12 × 1,75	12,5	280	230	15
HRF/HRP 150 × 50	152,7	142	320	412	171	65	80	70	385	355	12 × M18	3	M12 × 1,75	12,5	280	230	15
HRF/HRP 180 × 15	181,1	178,6	390	528	219	96	100	90	470	433	12 × M22	3	M12 × 1,75	15	340	250	15
HRF/HRP 180 × 20	181,5	176,1	390	528	219	96	100	90	470	433	12 × M22	3	M12 × 1,75	15	340	250	15
HRF/HRP 180 × 25	181,8	175,1	390	528	219	96	100	90	470	433	12 × M22	3	M12 × 1,75	15	340	250	15
HRF/HRP 180 × 30	182,1	174,1	390	528	219	96	100	90	470	433	12 × M22	3	M12 × 1,75	15	340	250	15
HRF/HRP 180 × 35	182,5	173,1	390	528	219	96	100	90	470	433	12 × M22	3	M12 × 1,75	15	340	250	15
HRF/HRP 180 × 40	182,8	172,1	390	528	219	96	100	90	470	433	12 × M22	3	M12 × 1,75	15	340	250	15
HRF/HRP 180 × 50	182,8	172,1	390	528	219	96	100	90	470	433	12 × M22	3	M12 × 1,75	15	340	250	15
HRF/HRP 210 × 20	211,4	208,1	440	570	235	100	100	100	530	490	12 × M24	3	M12 × 1,75	15	398	250	15
HRF/HRP 210 × 25	211,4	208,1	440	570	235	100	100	100	530	490	12 × M24	3	M12 × 1,75	15	398	250	15
HRF/HRP 210 × 30	211,4	208,1	440	570	235	100	100	100	530	490	12 × M24	3	M12 × 1,75	15	398	250	15
HRF/HRP 210 × 35	211,4	208,1	440	570	235	100	100	100	530	490	12 × M24	3	M12 × 1,75	15	398	250	15
HRF/HRP 210 × 40	211,4	208,1	440	570	235	100	100	100	530	490	12 × M24	3	M12 × 1,75	15	398	250	15
HRF/HRP 210 × 50	211,4	208,1	440	570	235	100	100	100	530	490	12 × M24	3	M12 × 1,75	15	398	250	15
HRF/HRP 240 × 25	241,9	237,5	490	600	250	100	100	100	560	520	16 × M24	3	M12 × 1,75	15	448	290	11,25
HRF/HRP 240 × 30	242,3	237	490	600	250	100	100	100	560	520	16 × M24	3	M12 × 1,75	15	448	290	11,25
HRF/HRP 240 × 35	242,7	236,5	490	600	250	100	100	100	560	520	16 × M24	3	M12 × 1,75	15	448	290	11,25
HRF/HRP 240 × 40	243	236,1	490	600	250	100	100	100	560	520	16 × M24	3	M12 × 1,75	15	448	290	11,25
HRF/HRP 240 × 50	243,8	235	490	600	250	100	100	100	560	520	16 × M24	3	M12 × 1,75	15	448	290	11,25

www.lmotion.ru lmotion-mail@ya.ru Тел.:(495) 921-34-60

Inverted roller screws ISR

Concept

The inverted planetary roller screw provides powerful electro–mechanical actuation when compactness, low torque and high load capabilities are prerequisites.

The rollers, synchronized with the threaded shaft through toothed rings, translate along the nut. The application loads acting on the translating push tube transit through the planetary rollers to the rotating shaft or nut. Toothed rings and guides provide the rolling motion and the even circumferential position of the rollers, for near-perfect load distribution. The rings and guides also avoid any parasitic friction between the rollers.

Application examples

The compact inverted roller screw, incorporated within an electro–mechanical actuator, can replace hydraulic or pneumatic actuation systems typically found in the following applications:

- Factory automation (for example, automotive assembly lines)
- Welding guns
- Portable high power tools
- Oil and gas subsea equipment
- Aerospace actuators

Design features	User benefits
Planetary roller screw concept without recirculation	Long service life and increased reliability improve productivity
Leads as small as 2,4 mm, combined with the benefits of the robust planetary roller screw design	Small leads achieved with robust threads, while providing high load carrying capacity and high axial stiffness Reduced requirements for electric motor torque to reach high load actuation
Either nut or shaft can be driven, the non–rotating and translating component acting directly as the push tube	Design flexibility Anti–rotation function can be easily integrated into the component acting as the push tube
Custom screw-to-motor attachments for easy integration	Compact, light weight solution with fewer parts for easy installation
Standard delivery without wipers	Guiding and sealing functions easily integrated on nut or shaft, resulting in high performance sealing
High speed and acceleration capability, similar to planetary roller screws	Preferred solutions for applications with high duty cycle and high cycle rates
Two versions are available: • ISR with axial play • IBR without backlash	Equipment stiffness and accuracy further increased when backlash is eliminated
Flexible production equipment	Custom designs to fit customer applications. Multiple dimensions can be created, starting from the standard assortment of planetary roller screws
Small lead associated to a relatively large nominal nut diameter	Low backdriving ability and even self locking solutions are possible

www.lmotion.ru lmotion-mail@ya.ru Тел.:(495) 921-34-60

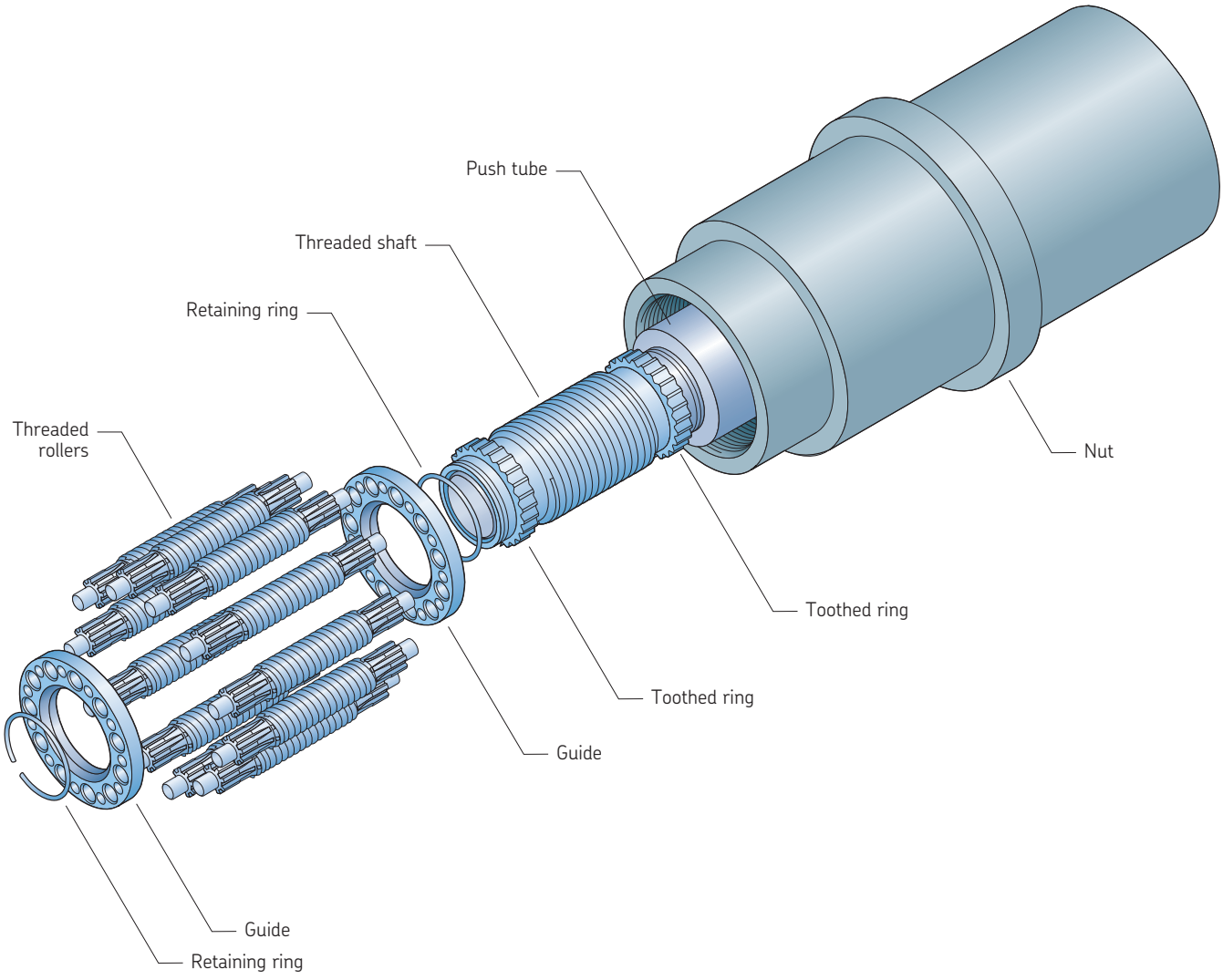

www.lmotion.ru lmotion-mail@ya.ru Тел.:(495) 921-34-60

Roller set of an inverted roller screw

Dimensions and technical characteristics

d_0	D_0	P_h	C_a	C_{0a}	η_p	η'_p
mm			kN		–	
18	30	2,4	35,6	69,9	0,69	0,55
	30	3	37,8	70,9	0,73	0,63
	30	4	36,6	61,2	0,77	0,70
	30	5	37,8	59,2	0,80	0,75
	30	6	40,4	61,9	0,82	0,78
21	35	2,4	55,5	102	0,66	0,48
	35	3	59,6	105	0,7	0,57
	35	4	63,3	104	0,75	0,67
	35	5	61,5	91,8	0,78	0,72
	35	6	64,2	92,2	0,8	0,75
24	40	2,4	63,7	118	0,63	0,41
	40	3	67,2	119	0,68	0,53
	40	4	72	119	0,73	0,63
	40	5	75,3	118	0,76	0,68
	40	6	74,5	109	0,79	0,73
30	50	2,4	93,2	195	0,58	0,28
	50	3	99,2	198	0,63	0,41
	50	4	105	194	0,69	0,55
	50	5	111	197	0,73	0,63
	50	6	117	200	0,76	0,68
39	65	2,4	135	311	0,52	0,08
	65	3	143	311	0,57	0,25
	65	4	153	312	0,64	0,44
	65	5	161	310	0,68	0,53
	65	6	169	314	0,72	0,61
48	80	2,4	209	564	0,47	0
	80	3	221	567	0,52	0,08
	80	4	234	557	0,59	0,31
	80	5	247	554	0,64	0,44
	80	6	259	559	0,68	0,53

www.lmotion.ru lmotion-mail@ya.ru Тел.:(495) 921-34-60

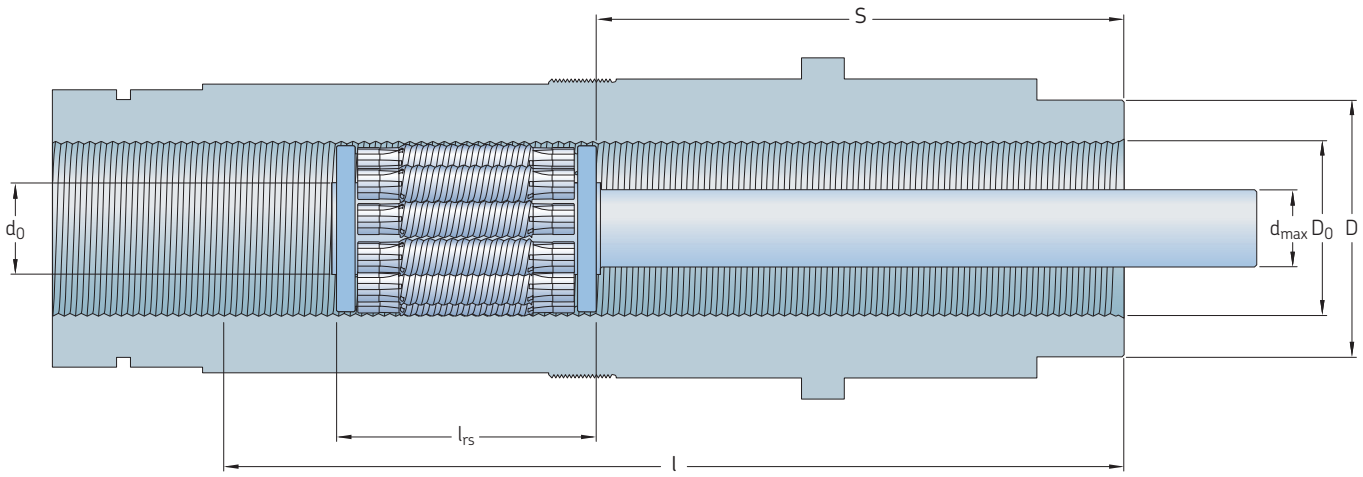

Designation	Maximum axial play	Recommended minimum nut outer diameter	Maximum push tube outer diameter[1]	Maximum stroke	Length of roller set
	S_{ap}	D	d_{max}	S	l_{rs}
–	mm				
ISR/IBR 18 × 2,4R3	0,02	38	16	65[2]	50
ISR/IBR 18 × 3R3	0,02	38	16	60[2]	50
ISR/IBR 18 × 4R3	0,02	38	16	55[2]	50
ISR/IBR 18 × 5R3	0,04	38	16	50[2]	50
ISR/IBR 18 × 6R3	0,04	38	16	45[2]	50
ISR/IBR 21 × 2,4R3	0,02	45	18	84[2]	56
ISR/IBR 21 × 3R3	0,02	45	18	79[2]	56
ISR/IBR 21 × 4R3	0,02	45	18	74[2]	56
ISR/IBR 21 × 5R3	0,04	45	18	69[2]	56
ISR/IBR 21 × 6R3	0,04	45	18	64[2]	56
ISR/IBR 24 × 2,4R3	0,02	50	21	210	65
ISR/IBR 24 × 3R3	0,02	50	21	170	65
ISR/IBR 24 × 4R3	0,02	50	21	110	65
ISR/IBR 24 × 5R3	0,04	50	21	80	65
ISR/IBR 24 × 6R3	0,04	50	21	75	65
ISR/IBR 30 × 2,4R3	0,02	60	27	210	75
ISR/IBR 30 × 3R3	0,02	60	27	210	75
ISR/IBR 30 × 4R3	0,02	60	27	210	75
ISR/IBR 30 × 5R3	0,04	60	27	200	75
ISR/IBR 30 × 6R3	0,04	60	27	200	75
ISR/IBR 39 × 2,4R3	0,02	75	36	195	90
ISR/IBR 39 × 3R3	0,02	75	36	195	90
ISR/IBR 39 × 4R3	0,02	75	36	195	90
ISR/IBR 39 × 5R3	0,04	75	36	195	90
ISR/IBR 39 × 6R3	0,04	75	36	195	90
ISR/IBR 48 × 2,4R3	0,02	90	44	171	114
ISR/IBR 48 × 3R3	0,02	90	44	171	114
ISR/IBR 48 × 4R3	0,02	90	44	171	114
ISR/IBR 48 × 5R3	0,04	90	44	171	114
ISR/IBR 48 × 6R3	0,04	90	44	171	114

[1] Recommended maximum push tube diameter for standard inverted roller screws. For additional information about large push tube diameters, please contact your local SKF representative
[2] For additional information about longer strokes, please contact your local SKF representative

www.lmotion.ru lmotion-mail@ya.ru Тел.:(495) 921-34-60

Rotating nut with planetary roller screws SRR

Concept

A rotating nut planetary roller screw assembly is designed to function like an electro-mechanical cylinder, and is recommended for applications where space is limited.

The basic assembly consists of a housing, two angular contact ball bearings and a roller screw nut. In the case of direct drive, a customer supplied hollow motor drives the screw nut. In the case of indirect drive, a customer supplied pulley or gear, attached to the back of the roller screw assembly is needed to drive the nut. The rotation of the nut translates the screw shaft which operates as a push tube of an electro-mechanical cylinder. The screw shaft must be fitted with an anti–rotation device and must be precisely guided.

Important:
SKF recommends that the roller screw nut be relubricated by regular injection of lubricant through an axial hole and a radial hole drilled in the roller screw shaft[1)].

Customers are responsible for sourcing and assembling the motor and/or drive train and frame holding the bearings housing.

Design features	User benefits
Planetary roller screws with a nut already fitted into a bearing housing	Convenience of a roller screw and integrated support function for easy design and assembly
Maximum n d_0 = 160 000 and acceleration up to 12 000 rad/s^2	Ideal combination of high load carrying capacity, speed and acceleration for heavy duty applications and intensive cycling
72 series angular contact ball bearings mounted in the housing are fitted with the nut and then adjusted for preload	Length saving solution ready to incorporate into application. Simplified engineering for machine builders
Bearings in back–to–back preloaded arrangement	Robust and stiff bearing arrangement to accommodate moment loads from the power transmission
2 garter seals (2 shields for size d_0 = 60 mm) protect the bearings against contaminants, making these assemblies relubrication-free under normal operating conditions	Durable assembly for operation in difficult environments
Wiper seals at each end of the nut of a standard assembly help to protect the nut from contaminants	
A grease fitting for the bearings is located on the outside surface of the housing. Standard grease is SKF LGEP2. Specific grease is on request	Easy maintenance
Roller screw nut relubricated through conduits drilled in the screw shaft	Independent relubrication for the bearings and for the roller screw
Two versions are available: • SRR with axial play • BRR without backlash	Stiffness and running accuracy are further improved when a roller screw without backlash is selected

Application examples

- Production processes in automotive industry (servo–presses, tube bending, forming, locking devices, etc.)
- Process in the injection moulding industry (part ejection)
- Short stroke and oscillating applications

1) For technical assistance regarding the roller screw nut relubrication, please contact your local SKF representative

www.lmotion.ru lmotion-mail@ya.ru Тел.:(495) 921-34-60

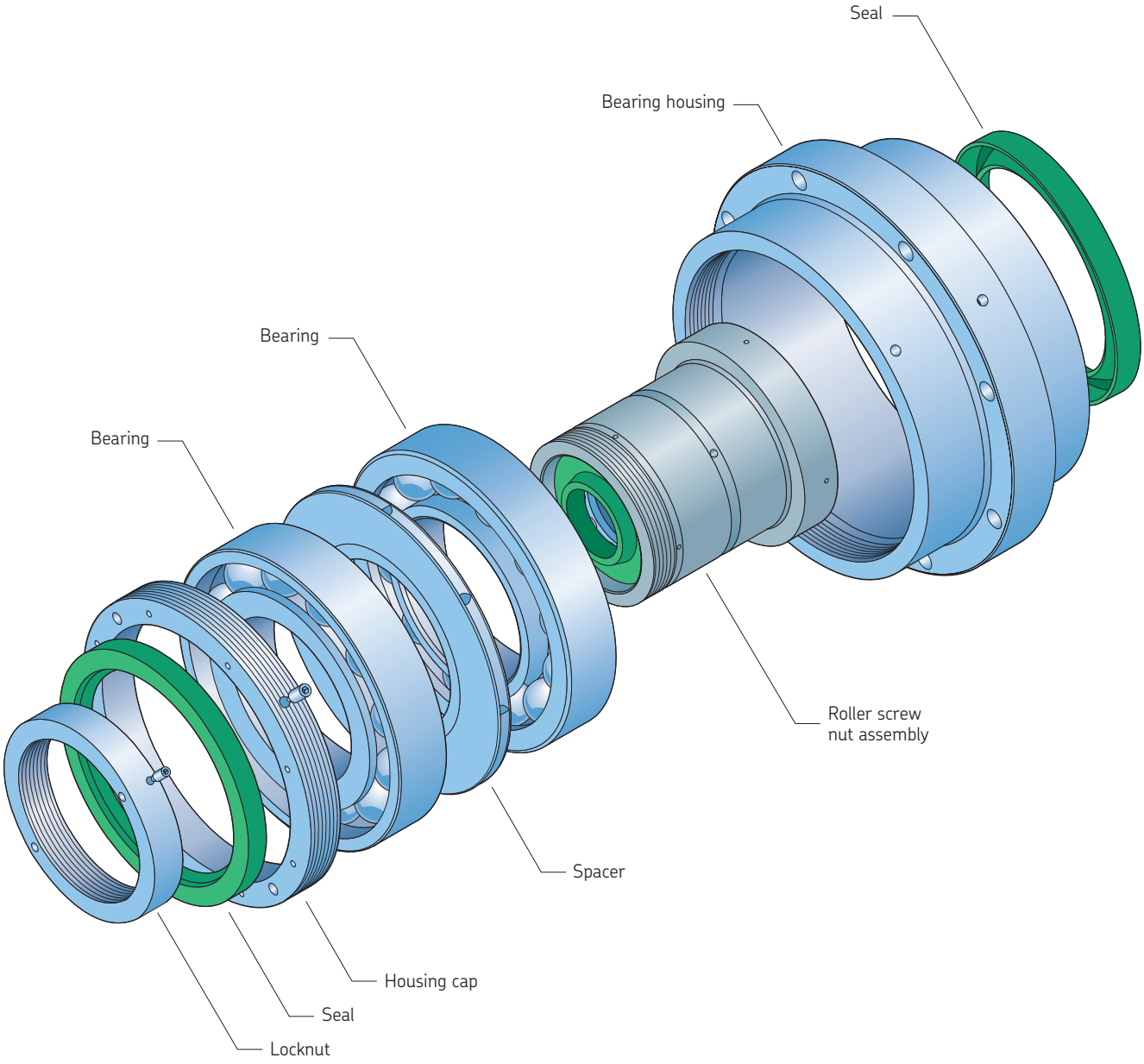

www.lmotion.ru lmotion-mail@ya.ru Тел.:(495) 921-34-60

Standard SRR

Components assembly

Dimensions and technical characteristics

d_0	P_h	L_{tp}	C_a	C_{oa}	η	η'	S_{ap}	m_n	m_s	I_{nn}	Z_n	Z_s
mm			kN		–		mm	kg	kg/m	kgmm^2	cm^3	cm^3/m
25	5	1 650	68,4	122	0,87	0,85	0,02	7	3,9	1 100	10,2	11
	10	1 650	78,5	118	0,89	0,88	0,04	7	3,9	1 100	10,2	11
	15	1 650	85,6	120	0,87	0,85	0,07	7	3,9	1 100	10,2	11
30	5	2 000	91,9	178	0,86	0,83	0,02	12	5,6	2 900	13,7	13,2
	10	2 000	106	174	0,89	0,88	0,04	12	5,6	2 900	13,7	13,2
	15	2 000	119	181	0,88	0,87	0,07	12	5,6	2 900	13,7	13,2
	20	2 000	123	177	0,86	0,83	0,07	12	5,6	2 900	13,7	13,2
39	5	2 650	129	269	0,83	0,80	0,02	20	9,4	10 500	27,9	17,1
	10	2 650	153	270	0,88	0,87	0,04	20	9,4	10 500	27,9	17,1
	15	2 650	168	273	0,89	0,88	0,07	20	9,4	10 500	27,9	17,1
	20	2 650	173	261	0,88	0,87	0,07	20	9,4	10 500	27,9	17,1
	25	2 650	175	249	0,86	0,84	0,07	20	9,4	10 500	27,9	17,1
48	5	3 300	198	482	0,81	0,76	0,02	37	14,2	28 000	54	21,1
	10	3 300	232	475	0,87	0,85	0,04	37	14,2	28 000	54	21,1
	15	3 300	258	486	0,89	0,88	0,07	37	14,2	28 000	54	21,1
	20	3 300	266	462	0,89	0,88	0,07	37	14,2	28 000	54	21,1
	25	3 300	286	491	0,88	0,87	0,07	37	14,2	28 000	54	21,1
60	10	4 250	339	780	0,86	0,83	0,04	100	22,2	85 000	103	26,4
	15	4 250	373	783	0,88	0,87	0,07	100	22,2	85 000	103	26,4
	20	4 250	395	786	0,89	0,88	0,07	100	22,2	85 000	103	26,4

www.lmotion.ru lmotion-mail@ya.ru Тел.:(495) 921-34-60

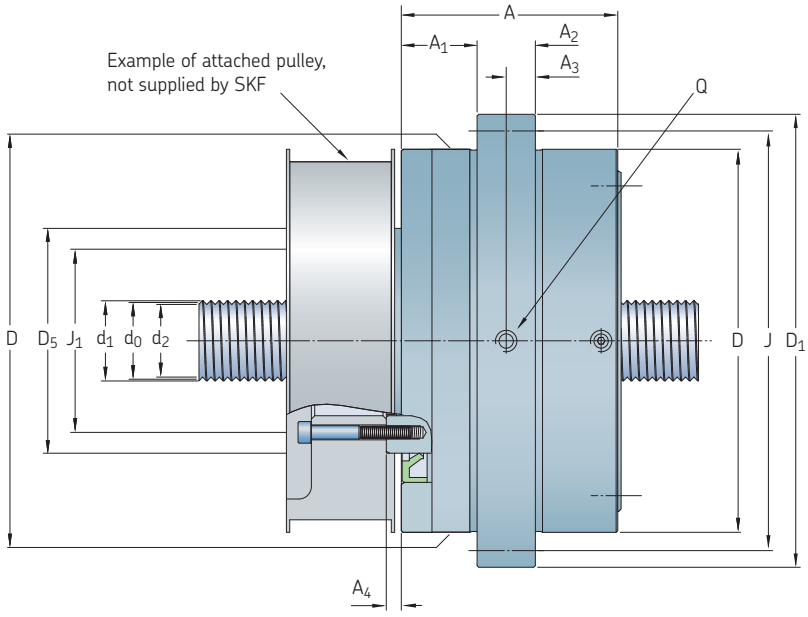

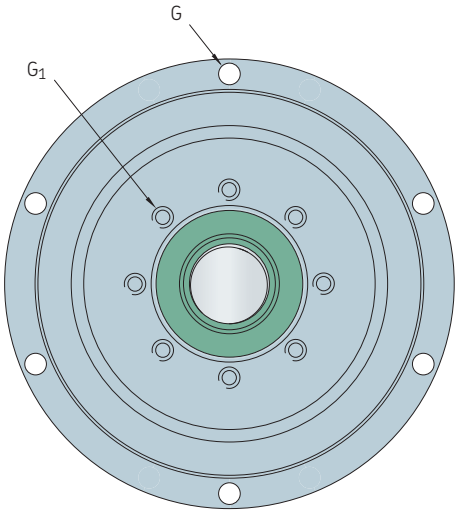

Designation	Dimensions														
	d_1	d_2	D g6/H7	A h12	A_1	A_2	A_3	A_4[1)]	D_1	J	D_5 h7	J_1	G	G_1	Q
–	mm														
SRR/BRR 25 × 5	25,4	24,3	120	81,5	28	25	12,5	6,5	153	137	70	58	6 × Ø9	8 × M6	M6
SRR/BRR 25 × 10	25,8	23,8	120	81,5	28	25	12,5	6,5	153	137	70	58	6 × Ø9	8 × M6	M6
SRR/BRR 25 × 15	26,2	23,2	120	81,5	28	25	12,5	6,5	153	137	70	58	6 × Ø9	8 × M6	M6
SRR/BRR 30 × 5	30,4	29,4	150	91,5	30	25	12,5	7,5	190	170	85	70	6 × Ø11	8 × M6	M8 × 1
SRR/BRR 30 × 10	30,8	28,8	150	91,5	30	25	12,5	7,5	190	170	85	70	6 × Ø11	8 × M6	M8 × 1
SRR/BRR 30 × 15	31,2	28,3	150	91,5	30	25	12,5	7,5	190	170	85	70	6 × Ø11	8 × M6	M8 × 1
SRR/BRR 30 × 20	31,5	27,6	150	91,5	30	25	12,5	7,5	190	170	85	70	6 × Ø11	8 × M6	M8 × 1
SRR/BRR 39 × 5	39,4	38,4	180	109,5	34	35	17,5	12,5	222	202	110	90	6 × Ø13	8 × M8	M8 × 1
SRR/BRR 39 × 10	39,8	37,9	180	109,5	34	35	17,5	12,5	222	202	110	90	6 × Ø13	8 × M8	M8 × 1
SRR/BRR 39 × 15	40,2	37,3	180	109,5	34	35	17,5	12,5	222	202	110	90	6 × Ø13	8 × M8	M8 × 1
SRR/BRR 39 × 20	40,5	36,7	180	109,5	34	35	17,5	12,5	222	202	110	90	6 × Ø13	8 × M8	M8 × 1
SRR/BRR 39 × 25	40,9	36,1	180	109,5	34	35	17,5	12,5	222	202	110	90	6 × Ø13	8 × M8	M8 × 1
SRR/BRR 48 × 5	48,4	47,4	230	130	45,5	35	17,5	9	272	252	135	110	8 × Ø13	8 × M8	M8 × 1
SRR/BRR 48 × 10	48,8	46,9	230	130	45,5	35	17,5	9	272	252	135	110	8 × Ø13	8 × M8	M8 × 1
SRR/BRR 48 × 15	49,2	46,3	230	130	45,5	35	17,5	9	272	252	135	110	8 × Ø13	8 × M8	M8 × 1
SRR/BRR 48 × 20	49,5	45,8	230	130	45,5	35	17,5	9	272	252	135	110	8 × Ø13	8 × M8	M8 × 1
SRR/BRR 48 × 25	49,9	45,2	230	130	45,5	35	17,5	9	272	252	135	110	8 × Ø13	8 × M8	M8 × 1
SRR/BRR 60 × 10	60,8	58,9	320	189	70,5	45	22,5	10	380	350	160	135	8 × Ø17,5	8 × M8	M8 × 1
SRR/BRR 60 × 15	61,2	58,4	320	189	70,5	45	22,5	10	380	350	160	135	8 × Ø17,5	8 × M8	M8 × 1
SRR/BRR 60 × 20	61,5	57,8	320	189	70,5	45	22,5	10	380	350	160	135	8 × Ø17,5	8 × M8	M8 × 1

[1)] Overhang of the pilot diameter for fixing the drive train of a rotating nut assembly

www.lmotion.ru lmotion-mail@ya.ru Тел.:(495) 921-34-60

Recirculating roller screws SV

Recirculating roller screws provide the ideal combination of load carrying capacity, fine resolution, positioning accuracy and axial stiffness for ultra precision driving solutions.

The small leads and small helix angle can provide a low back-driving capability, or even self–locking ability for certain sizes of recirculating roller screws, in combination with low rolling friction.

Application examples

- Medical
- Laboratory equipment
- Semi–conductor industry
- Telescopes
- Satellites
- Precision grinders

Design features	User benefits
Absence of small parts compared to small lead ball screw	Highly robust and durable
Nominal diameters from 8 to 125 mm	Wide standard assortment to fit most applications
Standard leads from 1 mm to 5 mm	Ideal combination of precise positioning accuracy, high load carrying capacity, maximum axial stiffness, and low torque requirements Precise resolution of movement Good repeatability with small displacements
Shaft lengths up to 8 000 mm	Longer shaft lengths available on request
Maximum n d_1 = 30 000 for nominal diameters $d_1 \leq 25$ mm Maximum n d_1 = 20 000 for nominal diameters $d_1 > 25$ mm Accelerations up to 4 000 rad/s^2	
High dynamic load carrying capacity up to 756 kN	Long service life
High static load carrying capacity up to 2 770 kN	Ability to accommodate heavy shock loads without raceway damage
Roller retention for nut and shaft disassembly (except for diameters $d_1 < 16$ mm)	Easy roller screw assembly
Optional support bearings	Support bearings simplify design, assembly, and ordering process
Three standard versions are available: • SV with axial play • BV without backlash • PV with preloaded split nut	Running accuracy and stiffness further improved without backlash or with preload
Flexible equipment	Custom designs e.g. left hand threads available on request

www.lmotion.ru lmotion-mail@ya.ru Тел.:(495) 921-34-60

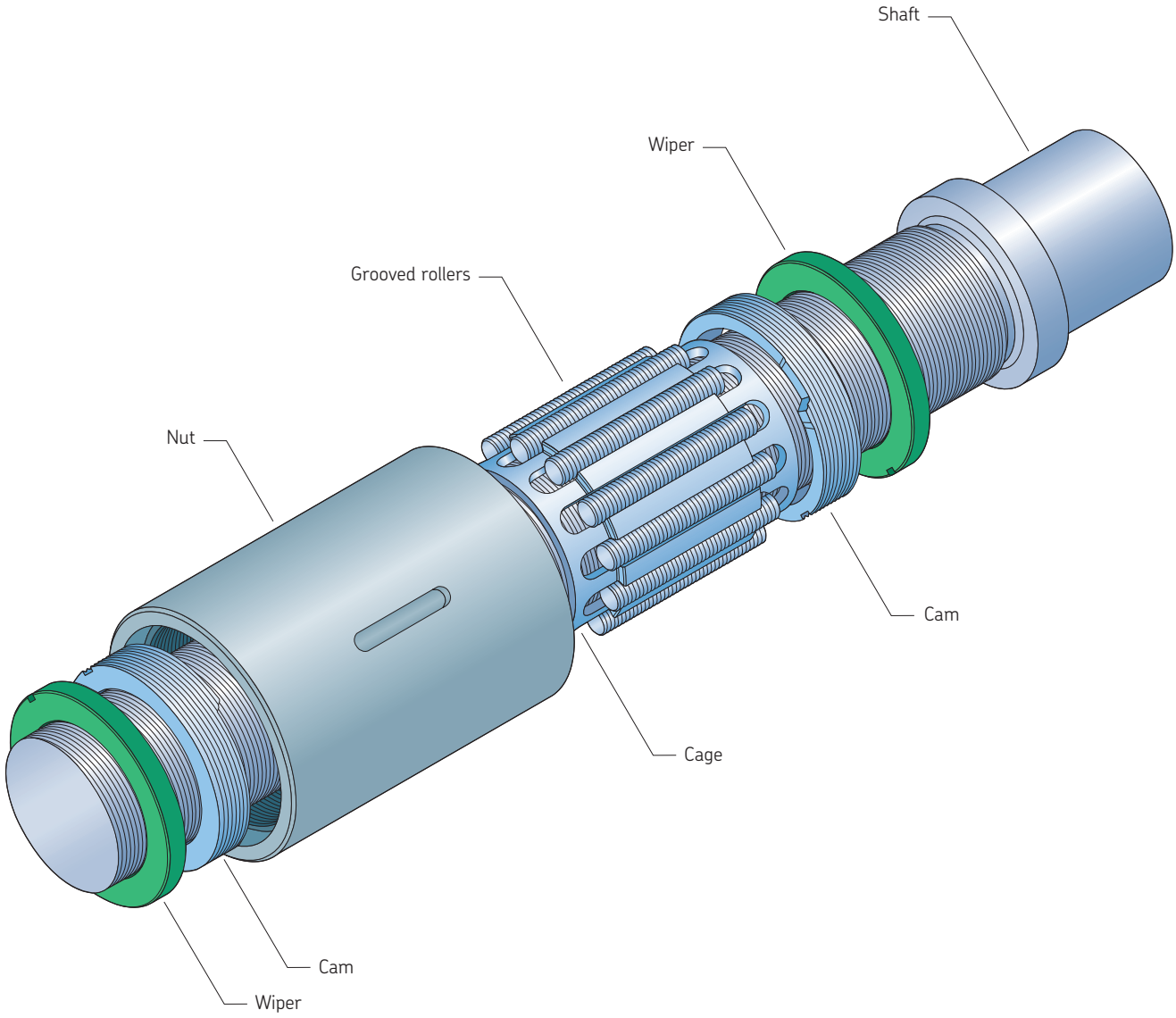

www.lmotion.ru lmotion-mail@ya.ru Тел.:(495) 921-34-60

Standard SVC

Grooved rollers

Components assembly

Dimensions and technical characteristics

d_1	P_h	L_{tp}	C_a	C_{oa}	η	η'	S_{ap}	T_{be}	m_n	m_s	I_s	I_{nn}	I_{ns}	Z_n	Z_s
mm			kN		–		mm	Nm	kg	kg/m	kgmm²/m	kgmm²		cm³	cm³/m
8	1	500	8,5	11	0,83	0,79	0,02	0,02	0,1	0,36	2,6	3,6	0,1	0,72	4
10	1	650	8,95	11,4	0,80	0,75	0,02	0,03	0,1	0,57	6,7	5	0,1	0,95	5
	2	650	8,95	11,4	0,87	0,85	0,02	0,03	0,1	0,57	6,7	5	0,1	0,95	5
12	1	750	10,3	14	0,78	0,71	0,02	0,05	0,1	0,84	14,2	6,7	0,1	1,08	6
	2	750	10,3	14	0,86	0,83	0,02	0,05	0,1	0,84	14,2	6,7	0,1	1,08	6
16	1	1 050	11,5	16,8	0,73	0,63	0,02	0,1	0,1	1,51	46,2	14	0,3	1,43	8
	2	1 050	11,5	16,8	0,83	0,79	0,02	0,1	0,1	1,51	46,2	14	0,3	1,43	8
20	1	1 300	18,5	36,6	0,69	0,54	0,02	0,18	0,2	2,38	115	29,8	0,8	1,9	9
	2	1 300	18,5	36,6	0,80	0,75	0,02	0,2	0,2	2,38	115	29,8	0,8	1,9	9
25	1	1 650	32,9	68,4	0,64	0,43	0,02	0,35	0,3	3,75	285	79,3	2,5	3,57	11
	2	1 650	32,9	68,4	0,77	0,70	0,02	0,4	0,3	3,75	285	79,3	2,5	3,57	11
32	1	2 150	64,3	159	0,58	0,28	0,02	0,5	0,6	6,18	773	280	9,1	6,92	15
	2	2 150	64,3	159	0,73	0,63	0,02	0,5	0,6	6,18	773	280	9,1	6,92	15
40	1	2 700	79,1	232	0,53	0,11	0,02	0,7	1,2	9,69	1 900	879	18,8	9,57	18
	2	2 700	49,9	117	0,69	0,54	0,04	0,7	1,2	9,52	1 840	951	20	13,6	18
50	1	3 500	190	544	0,47	0	0,02	1,2	2	15,0	4 550	2 190	76	24,9	22
	2	3 500	98,1	249	0,64	0,43	0,04	1,2	2	15,0	4 550	2 190	68,6	24,4	22
	3	3 500	153	443	0,72	0,61	0,04	1,2	2	15,0	4 550	2 190	88,1	24	22
	4	3 500	98,1	249	0,77	0,70	0,04	1,2	2	15,0	4 550	2 190	68,6	24,4	22
63	2	4 500	186	534	0,59	0,29	0,04	1,8	3,8	23,9	11 600	6 460	230	44,3	28
	4	4 500	186	534	0,73	0,63	0,04	2,0	3,8	23,9	11 600	6 460	230	44,3	28
80	4	6 000	325	888	0,69	0,54	0,07	3,0	12,5	38,1	29 400	38 900	1 290	166	36
100	5	8 000	469	1 376	0,69	0,54	0,07	4,5	22,8	59,51	71 800	108 000	4 000	308	44
125	5	8 000	756	2 770	0,64	0,43	0,07	7,0	46,1	93,66	178 000	342 000	11 800	520	55

Preferred range

www.lmotion.ru lmotion-mail@ya.ru Тел.:(495) 921-34-60

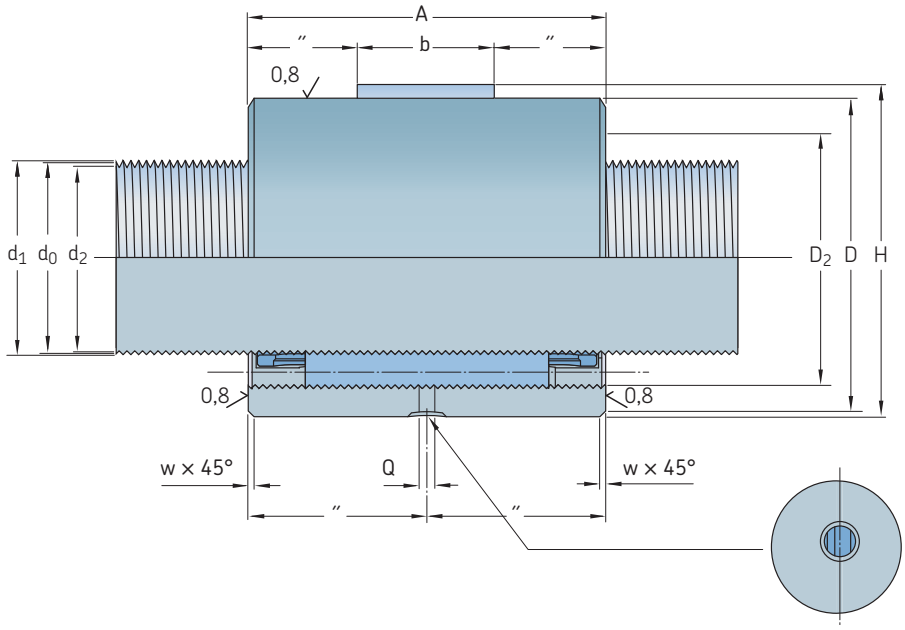

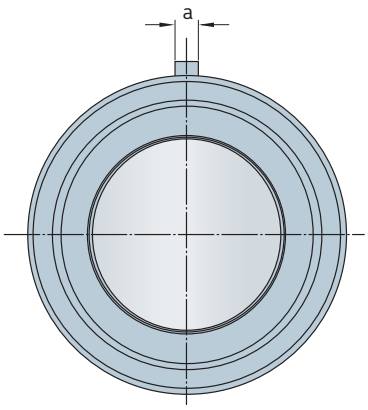

Designation	Dimensions										
	d_0	d_2	D g6/H7	A with wiper recesses h12	A without wiper recesses h12	w	a h9	b	H	Q	D_2
–	mm										
SVC/BVC 8 × 1	7,7	7,1	20	40	31	0,2	2	12	20,8	5	16,5
SVC/BVC 10 × 1	9,7	9,1	22	40	31	0,2	2	12	22,8	5	18,5
SVC/BVC 10 × 2	9,7	9,1	22	40	31	0,2	2	12	22,8	5	18,5
SVC/BVC 12 × 1	11,7	11,1	24	40	31	0,2	2	12	24,8	5	20,5
SVC/BVC 12 × 2	11,7	11,1	24	40	31	0,2	2	12	24,8	5	20,5
SVC/BVC 16 × 1	15,7	15,1	29	40	31	0,5	3	12	30,2	5	25
SVC/BVC 16 × 2	15,7	15,1	29	40	31	0,5	3	12	30,2	5	25
SVC/BVC 20 × 1	19,7	19,1	34	45	37	0,5	3	16	35,2	5	28,5
SVC/BVC 20 × 2	19,7	19,1	34	45	37	0,5	3	16	35,2	5	28,5
SVC/BVC 25 × 1	24,7	24,1	42	54	44	0,5	4	20	43,5	5	36
SVC/BVC 25 × 2	24,7	24,1	42	54	44	0,5	4	20	43,5	5	36
SVC/BVC 32 × 1	31,7	31,1	54	67	57	1	4	25	55,5	5	45
SVC/BVC 32 × 2	31,7	31,1	54	67	57	1	4	25	55,5	5	45
SVC/BVC 40 × 1	39,7	39,1	68	75	63	1	5	32	70	5	55
SVC/BVC 40 × 2	39,3	38,2	68	84	72	1	5	32	70	5	57
SVC/BVC 50 × 1	49,7	49,1	82	101	85	1	6	32	84,5	8	70
SVC/BVC 50 × 2	49,3	48,7	82	101	85	1	6	32	84,5	8	70
SVC 50 × 3	49,5	48,6	82	108	92	1,5	6	35	84,5	8	70
SVC 50 × 4	49,3	48,2	82	101	85	1	6	32	84,5	8	70
SVC 63 × 2	62,3	61,2	103	120	104	1	6	40	105,5	8	94
SVC 63 × 4	62,3	61,2	103	120	104	1	6	40	105,5	8	94
SVC 80 × 4	78,6	76,4	141	197	175	1,5	8	63	144	10	120
SVC 100 × 5	98,3	95,5	175	237	205	2	10	80	178	10	150
SVC 125 × 5	123,3	120,5	220	282	250	3	12	100	223	12	185

www.lmotion.ru lmotion-mail@ya.ru Тел.:(495) 921-34-60

Standard SVF

Grooved rollers

Components assembly

Dimensions and technical characteristics

d_1	P_h	L_{tp}	C_a	C_{oa}	η	η'	S_{ap}	T_{be}	m_n	m_s	I_s	I_{nn}	I_{ns}	Z_n	Z_s
mm			kN		–		mm	Nm	kg	kg/m	kgmm²/m	kgmm²		cm³	cm³/m
8	1	500	8,5	11	0,83	0,79	0,02	0,02	0,2	0,36	2,6	47,9	0,1	0,72	4
10	1	650	8,95	11,4	0,80	0,75	0,02	0,03	0,2	0,57	6,7	47	0,1	0,95	5
	2	650	8,95	11,4	0,87	0,85	0,02	0,03	0,2	0,57	6,7	47	0,1	0,95	5
12	1	750	10,3	14	0,78	0,71	0,02	0,05	0,2	0,84	14,2	63,5	0,1	1,08	6
	2	750	10,3	14	0,86	0,83	0,02	0,05	0,2	0,84	14,2	63,5	0,1	1,08	6
16	1	1 050	11,5	16,8	0,73	0,63	0,02	0,1	0,3	1,51	46,2	100	0,3	1,43	8
	2	1 050	11,5	16,8	0,83	0,79	0,02	0,1	0,3	1,51	46,2	100	0,3	1,43	8
20	1	1 300	18,5	36,6	0,69	0,54	0,02	0,18	0,4	2,38	115	192	0,8	1,9	9
	2	1 300	18,5	36,6	0,80	0,75	0,02	0,2	0,4	2,38	115	192	0,8	1,9	9
25	1	1 650	32,9	68,4	0,64	0,43	0,02	0,35	0,6	3,75	285	416	2,5	3,57	11
	2	1 650	32,9	68,4	0,77	0,70	0,02	0,4	0,6	3,75	285	416	2,5	3,57	11
32	1	2 150	64,3	159	0,58	0,28	0,02	0,5	1,2	6,18	773	1 110	9,1	6,92	15
	2	2 150	64,3	159	0,73	0,63	0,02	0,5	1,2	6,18	773	1 110	9,1	6,92	15
40	1	2 700	79,1	232	0,53	0,11	0,02	0,7	2,1	9,69	1 900	3 120	18,8	9,57	18
	2	2 700	49,9	117	0,69	0,54	0,04	0,7	2,2	9,52	1 840	3 200	20	13,6	18
50	1	3 500	190	544	0,47	0	0,02	1,2	3,7	15	4 550	8 190	76	24,9	22
	2	3 500	98,1	249	0,64	0,43	0,04	1,2	3,7	15	4 550	8 190	68,6	24,4	22
	3	3 500	153	443	0,72	0,61	0,04	1,2	3,7	15	4 550	8 050	88,1	24	22
	4	3 500	98,1	249	0,77	0,70	0,04	1,2	3,7	15	4 550	8 190	68,6	24,4	22
63	2	4 500	186	534	0,59	0,29	0,04	1,8	6,4	23,9	11 600	20 100	230	44,3	28
	4	4 500	186	534	0,73	0,63	0,04	2,0	6,4	23,9	11 600	20 100	230	44,3	28
80	4	6 000	325	888	0,69	0,54	0,07	3,0	17,8	38,1	29 400	92 600	1 290	166	36
100	5	8 000	469	1 376	0,69	0,54	0,07	4,5	33,1	59,5	71 800	256 000	4 000	308	44
125	5	8 000	756	2 770	0,64	0,43	0,07	7,0	62,3	93,7	178 000	733 000	11 800	520	55

www.lmotion.ru lmotion-mail@ya.ru Тел.:(495) 921-34-60

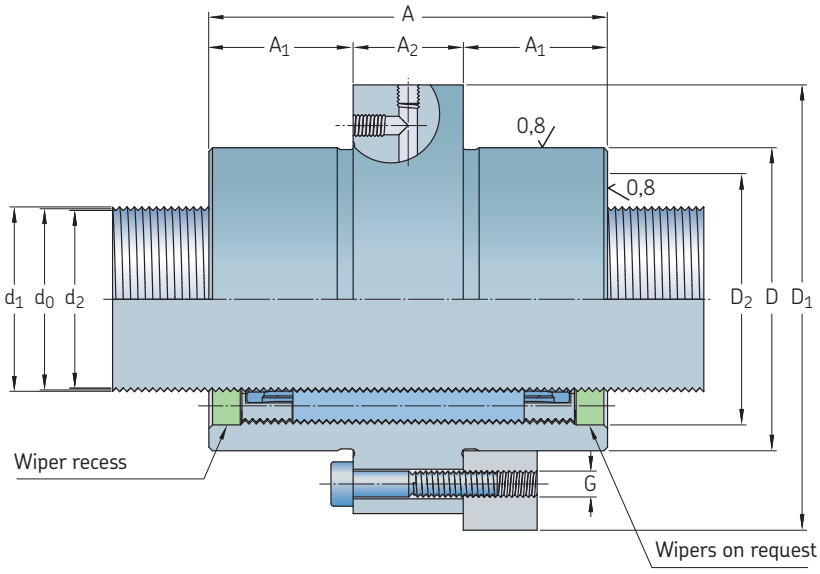

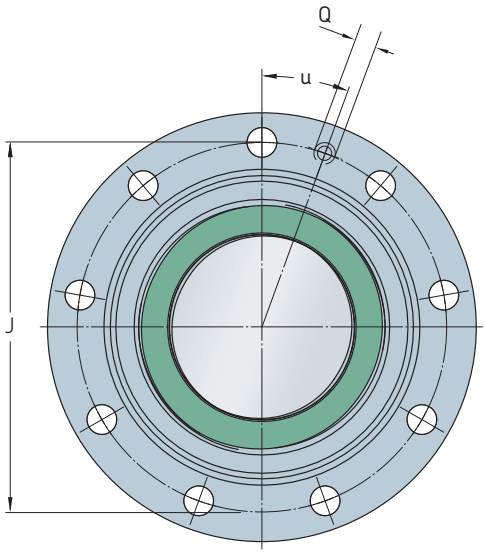

Designation	Dimensions											
	d_0	d_2	D g6/H7	A with wiper recesses h12	A_1	A_2	D_1 js12	J	G	Q	D_2	u
–	mm											°
SVF/BVF 8 × 1	7,7	7,1	22	40	12	16	43	33	6 × M4	M6	16,5	30
SVF/BVF 10 × 1	9,7	9,1	22	40	12	16	43	33	6 × M4	M6	18,5	30
SVF/BVF 10 × 2	9,7	9,1	22	40	12	16	43	33	6 × M4	M6	18,5	30
SVF/BVF 12 × 1	11,7	11,1	25	40	12	16	46	36	6 × M4	M6	20,5	30
SVF/BVF 12 × 2	11,7	11,1	25	40	12	16	46	36	6 × M4	M6	20,5	30
SVF/BVF 16 × 1	15,7	15,1	30	40	12	16	51	41	6 × M4	M6	25	30
SVF/BVF 16 × 2	15,7	15,1	30	40	12	16	51	41	6 × M4	M6	25	30
SVF/BVF 20 × 1	19,7	19,1	35	45	13,5	18	58	46	6 × M5	M6	28,5	30
SVF/BVF 20 × 2	19,7	19,1	35	45	13,5	18	58	46	6 × M5	M6	28,5	30
SVF/BVF 25 × 1	24,7	24,1	45	54	18	18	68	56	6 × M5	M6	36	30
SVF/BVF 25 × 2	24,7	24,1	45	54	18	18	68	56	6 × M5	M6	36	30
SVF/BVF 32 × 1	31,7	31,1	56	67	23,5	20	84	70	6 × M6	M6	45	30
SVF/BVF 32 × 2	31,7	31,1	56	67	23,5	20	84	70	6 × M6	M6	45	30
SVF/BVF 40 × 1	39,7	39,1	68	75	24	27	102	85	6 × M8	M6	55	30
SVF/BVF 40 × 2	39,3	38,2	68	84	28,5	27	102	85	6 × M8	M6	57	30
SVF/BVF 50 × 1	49,7	49,1	82	101	34	33	124	102	6 × M10	M6	70	30
SVF/BVF 50 × 2	49,3	48,7	82	101	34	33	124	102	6 × M10	M6	70	30
SVF 50 × 3	49,5	48,6	82	108	37,5	33	124	102	6 × M10	M6	70	30
SVF 50 × 4	49,3	48,2	82	101	34	33	124	102	6 × M10	M6	70	30
SVF 63 × 2	62,3	61,2	105	120	43,5	33	150	127	6 × M12	M8 × 1	94	30
SVF 63 × 4	62,3	61,2	105	120	43,5	33	150	127	6 × M12	M8 × 1	94	30
SVF 80 × 4	78,6	76,4	140	197	76	45	200	170	8 × M16	M8 × 1	120	22,5
SVF 100 × 5	98,3	95,5	180	237	93,5	50	240	210	12 × M16	M8 × 1	150	15
SVF 125 × 5	123,3	120,5	220	282	113,5	55	310	270	12 × M18	M8 × 1	185	15

www.lmotion.ru lmotion-mail@ya.ru Тел.:(495) 921-34-60

Standard PVU

Grooved rollers

Components assembly

Dimensions and technical characteristics

d_1	P_h	L_{tp}	C_a	C_{0a}	η	η'	R_{ng}	R_{nr}	T_{pr}	F_{pr}	m_n	m_s	I_s	I_{nn}	I_{ns}	Z_n	Z_s
mm			kN		–		N/µm	–	N/m	N	kg	kg/m	kgmm²/m	kgmm²		cm³	
8	1	400	4,88	5,51	0,83	0,79	140	190	0,05	770	0,1	0,36	2,6	3,6	0,1	0,72	4
10	1	500	5,14	5,7	0,80	0,75	138	185	0,07	820	0,1	0,57	6,7	5	0,1	0,95	5
	2	500	5,14	5,7	0,87	0,85	138	185	0,07	820	0,1	0,57	6,7	5	0,1	0,95	5
12	1	600	5,96	7	0,78	0,71	159	215	0,1	940	0,1	0,84	14,2	6,7	0,1	1,08	6
	2	600	5,96	7	0,86	0,83	159	215	0,1	940	0,1	0,84	14,2	6,7	0,1	1,08	6
16	1	825	6,71	8,42	0,73	0,63	182	245	0,15	1 060	0,1	1,51	46,2	14	0,3	1,43	8
	2	825	6,71	8,42	0,83	0,79	182	245	0,15	1 060	0,1	1,51	46,2	14	0,3	1,43	8
20	1	1 050	10,6	18,3	0,69	0,54	362	490	0,2	1 430	0,2	2,38	115	29,8	0,8	1,9	9
	2	1 050	10,6	18,3	0,80	0,75	362	490	0,3	1 430	0,2	2,38	115	29,8	0,8	1,9	9
25	1	1 300	18,9	34,2	0,64	0,43	469	635	0,5	2 270	0,3	3,75	285	79,3	2,5	3,57	11
	2	1 300	18,9	34,2	0,77	0,70	469	635	0,55	2 270	0,3	3,75	285	79,3	2,5	3,57	11
32	1	1 700	36,9	79,6	0,58	0,28	736	995	0,7	2 510	0,6	6,18	773	280	9,1	6,92	15
	2	1 700	36,9	79,6	0,73	0,63	721	975	0,7	2 320	0,6	6,18	773	280	9,1	6,92	15
40	1	2 150	45,4	116	0,53	0,11	1 034	1 395	1	2 840	1,2	9,69	1 900	879	18,8	9,57	18
	2	2 150	28,7	58,6	0,69	0,54	618	835	1	2 710	1,2	9,52	1 840	951	20	13,6	18
50	1	2 800	109	272	0,47	0,00	1 100	1 430	1,85	3 900	2	15	4 550	2 190	76	24,4	22
	2	2 800	56,3	125	0,64	0,43	803	1 045	1,85	3 660	2	15	4 550	2 190	68,6	24,4	22
	3	2 800	88	222	0,72	0,61	1 000	1 300	1,85	3 600	2	15	4 550	2 190	81,1	24,4	22
	4	2 800	56,3	125	0,77	0,70	803	1 045	1,85	3 660	2	15	4 550	2 190	68,6	24,4	22
63	2	3 600	107	267	0,59	0,29	1 177	1 530	2,5	4 540	3,8	23,9	11 600	6 460	230	44,3	28
	4	3 600	107	267	0,73	0,63	1 177	1 530	2,75	4 540	3,8	23,9	11 600	6 460	230	44,3	28
80	4	4 000	187	444	0,69	0,54	1 280	1 665	4	5 410	12,5	38,1	29 400	38 900	1 290	166	36
100	5	4 000	269	688	0,69	0,54	1 323	1 720	6	5 920	22,8	59,5	71 800	108 000	4 000	308	44
125	5	4 000	434	1385	0,64	0,43	2 027	2 635	8,5	6 510	46,1	93,7	179 000	342 000	11 800	520	55

www.lmotion.ru lmotion-mail@ya.ru Тел.:(495) 921-34-60

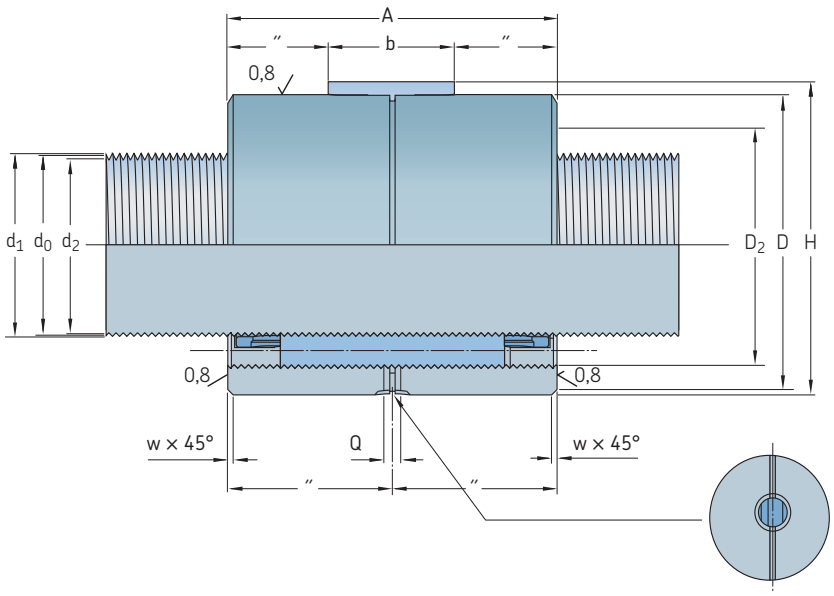

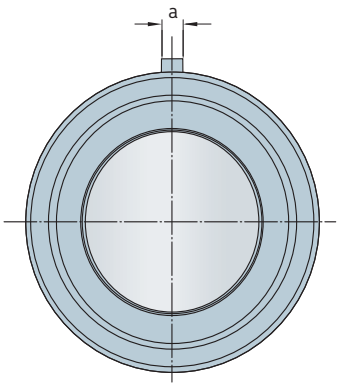

Designation	Dimensions										
	d_0	d_2	D g6/H7	A with wiper recesses h12	A without wiper recesses h12	w	a h9	b	H	Q	D_2
–	mm										
PVU 8 × 1	7,7	7,1	20	40	31	0,2	2	12	20,8	5	16,5
PVU 10 × 1	9,7	9,1	22	40	31	0,2	2	12	22,8	5	18,5
PVU 10 × 2	9,7	9,1	22	40	31	0,2	2	12	22,8	5	18,5
PVU 12 × 1	11,7	11,1	24	40	31	0,2	2	12	24,8	5	20,5
PVU 12 × 2	11,7	11,1	24	40	31	0,2	2	12	24,8	5	20,5
PVU 16 × 1	15,7	15,1	29	40	31	0,5	3	12	30,2	5	25
PVU 16 × 2	15,7	15,1	29	40	31	0,5	3	12	30,2	5	25
PVU 20 × 1	19,7	19,1	34	45	37	0,5	3	16	35,2	5	28,5
PVU 20 × 2	19,7	19,1	34	45	37	0,5	3	16	35,2	5	28,5
PVU 25 × 1	24,7	24,1	42	54	44	0,5	4	20	43,5	5	36
PVU 25 × 2	24,7	24,1	42	54	44	0,5	4	20	43,5	5	36
PVU 32 × 1	31,7	31,1	54	67	57	1	4	25	55,5	5	45
PVU 32 × 2	31,7	31,1	54	67	57	1	4	25	55,5	5	45
PVU 40 × 1	39,7	39,1	68	75	63	1	5	32	70	5	55
PVU 40 × 2	39,3	38,2	68	84	72	1	5	32	70	5	57
PVU 50 × 1	49,7	49,1	82	101	85	1	6	32	84,5	8	70
PVU 50 × 2	49,3	48,7	82	101	85	1	6	32	84,5	8	70
PVU 50 × 3	49,5	48,6	82	108	92	1,5	6	35	84,5	8	70
PVU 50 × 4	49,3	48,2	82	101	85	1	6	32	84,5	8	70
PVU 63 × 2	62,3	61,2	103	120	104	1	6	40	105,5	8	94
PVU 63 × 4	62,3	61,2	103	120	104	1	6	40	105,5	8	94
PVU 80 × 4	78,6	76,4	141	197	175	1,5	8	63	144	10	120
PVU 100 × 5	98,3	95,5	175	237	205	2	10	80	178	10	150
PVU 125 × 5	123,3	120,5	220	282	250	3	12	100	223	12	185

www.lmotion.ru lmotion-mail@ya.ru Тел.:(495) 921-34-60

Standard PVK

Grooved rollers

Components assembly

Dimensions and technical characteristics

d_1	P_h	L_{tp}	C_a	C_{0a}	η	η'	R_{ng}	R_{nr}	T_{pr}	F_{pr}	m_n	m_s	I_s	I_{nn}	I_{ns}	Z_n	Z_s
mm			kN		–		N/µm	–	N/m	N	kg	kg/m	kgmm²/m	kgmm²		cm³	
8	1	400	4,88	5,51	0,83	0,79	190	255	0,05	770	0,2	0,36	2,6	47,9	0,1	0,72	4
10	1	500	5,14	5,7	0,80	0,75	185	250	0,07	820	0,2	0,57	6,7	47	0,1	0,95	5
	2	500	5,14	5,7	0,87	0,85	185	250	0,07	820	0,2	0,57	6,7	47	0,1	0,95	5
12	1	600	5,96	7	0,78	0,71	215	290	0,1	940	0,2	0,84	14,2	63,5	0,1	1,08	6
	2	600	5,96	7	0,86	0,83	215	290	0,1	940	0,2	0,84	14,2	63,5	0,1	1,08	6
16	1	825	6,71	8,42	0,73	0,63	245	330	0,15	1 060	0,3	1,51	46,2	100	0,3	1,43	8
	2	825	6,71	8,42	0,83	0,79	245	330	0,15	1 060	0,3	1,51	46,2	100	0,3	1,43	8
20	1	1 050	10,6	18,3	0,69	0,54	490	660	0,2	1 430	0,4	2,38	115	192	0,8	1,9	9
	2	1 050	10,6	18,3	0,80	0,75	490	660	0,3	1 430	0,4	2,38	115	192	0,8	1,9	9
25	1	1 300	18,9	34,2	0,64	0,43	635	855	0,5	2 270	0,6	3,75	285	416	2,5	3,57	11
	2	1 300	18,9	34,2	0,77	0,70	635	855	0,55	2 270	0,6	3,75	285	416	2,5	3,57	11
32	1	1 700	36,9	79,6	0,58	0,28	995	1 345	0,7	2 510	1,2	6,18	773	1 110	9,1	6,92	15
	2	1 700	36,9	79,6	0,73	0,63	975	1 315	0,7	2 320	1,2	6,18	773	1 110	9,1	6,92	15
40	1	2 150	45,4	116	0,53	0,11	1 395	1 885	1	2 840	2,1	9,69	1 900	3 120	18,8	9,57	18
	2	2 150	28,7	58,6	0,69	0,54	835	1 125	1	2 710	2,2	9,52	1 840	3 200	20	13,6	18
50	1	2 800	109	272	0,47	0,00	1 430	1 930	1,85	3 900	3,7	15	4 550	8 190	76	24,4	22
	2	2 800	56,3	125	0,64	0,43	1 045	1 410	1,85	3 660	3,7	15	4 550	8 190	68,6	24,4	22
	3	2 800	88	222	0,72	0,61	1 300	1 755	1,85	3 600	3,7	15	4 550	8 050	81,1	24,4	22
	4	2 800	56,3	125	0,77	0,70	1 045	1 410	1,85	3 660	3,7	15	4 550	8 190	68,6	24,4	22
63	2	3 600	107	267	0,59	0,29	1 530	2 065	2,5	4 540	6,4	23,9	11 600	20 100	230	44,3	28
	4	3 600	107	267	0,73	0,63	1 530	2 065	2,25	4 540	6,4	23,9	11 600	20 100	230	44,3	28
80	4	4 000	187	444	0,69	0,54	1 665	2 250	4	5 410	17,8	38,1	29 400	92 600	1 290	166	36
100	5	4 000	269	688	0,69	0,54	1 720	2 320	6	5 920	33,1	59,5	71 800	256 000	4 000	308	44
125	5	4 000	434	1 385	0,64	0,43	2 635	3 555	8,5	6 510	62,3	93,7	179 000	733 000	11 800	520	55

www.lmotion.ru lmotion-mail@ya.ru Тел.:(495) 921-34-60

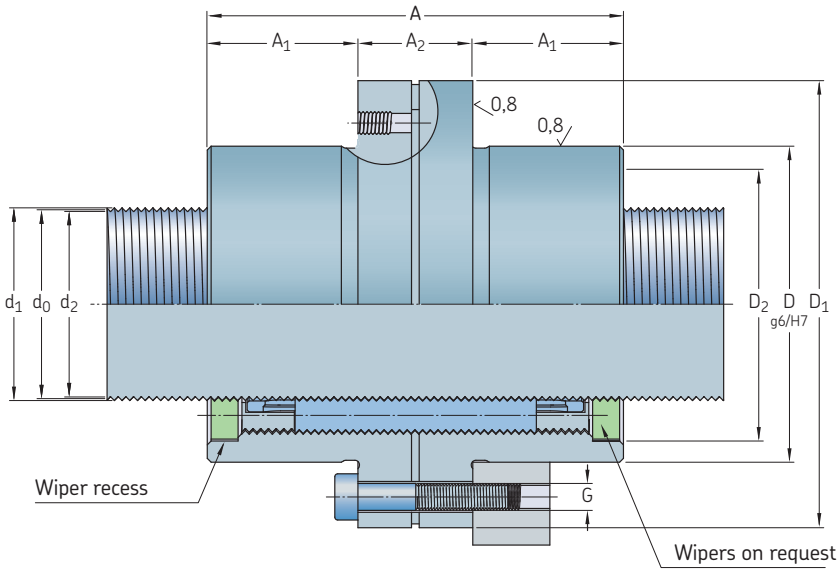

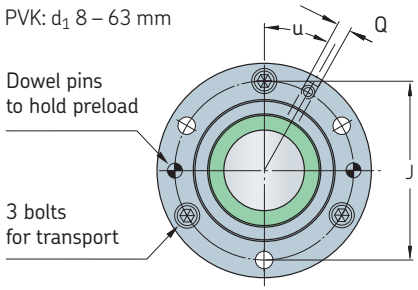

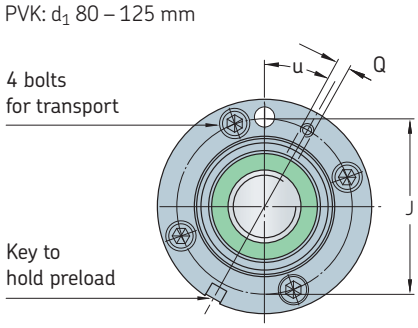

Designation	Dimensions											
	d_0	d_2	D g6/H7	A with wiper recesses h12	A_1	A_2	D_1 js12	J	G	Q	D_2	u
–	mm											°
PVK 8 × 1	7,7	7,1	22	40	12	16	43	33	6 × M4	M6	16,5	30
PVK 10 × 1	9,7	9,1	22	40	12	16	43	33	6 × M4	M6	18,5	30
PVK 10 × 2	9,7	9,1	22	40	12	16	43	33	6 × M4	M6	18,5	30
PVK 12 × 1	11,7	11,1	25	40	12	16	46	36	6 × M4	M6	20,5	30
PVK 12 × 2	11,7	11,1	25	40	12	16	46	36	6 × M4	M6	20,5	30
PVK 16 × 1	15,7	15,1	30	40	12	16	51	41	6 × M4	M6	25	30
PVK 16 × 2	15,7	15,1	30	40	12	16	51	41	6 × M4	M6	25	30
PVK 20 × 1	19,7	19,1	35	45	13,5	18	58	46	6 × M5	M6	28,5	30
PVK 20 × 2	19,7	19,1	35	45	13,5	18	58	46	6 × M5	M6	28,5	30
PVK 25 × 1	24,7	24,1	45	54	18	18	68	56	6 × M5	M6	36	30
PVK 25 × 2	24,7	24,1	45	54	18	18	68	56	6 × M5	M6	36	30
PVK 32 × 1	31,7	31,1	56	67	23,5	20	84	70	6 × M6	M6	45	30
PVK 32 × 2	31,7	31,1	56	67	23,5	20	84	70	6 × M6	M6	45	30
PVK 40 × 1	39,7	39,1	68	75	24	27	102	85	6 × M8	M6	55	30
PVK 40 × 2	39,3	38,2	68	84	28,5	27	102	85	6 × M8	M6	57	30
PVK 50 × 1	49,7	49,1	82	101	34	33	124	102	6 × M10	M6	70	30
PVK 50 × 2	49,3	48,7	82	101	34	33	124	102	6 × M10	M6	70	30
PVK 50 × 3	49,5	48,6	82	108	37,5	33	124	102	6 × M10	M6	70	30
PVK 50 × 4	49,3	48,2	82	101	34	33	124	102	6 × M10	M6	70	30
PVK 63 × 2	62,3	61,2	105	120	43,5	33	150	127	6 × M12	M8 × 1	94	30
PVK 63 × 4	62,3	61,2	105	120	43,5	33	150	127	6 × M12	M8 × 1	94	30
PVK 80 × 4	78,6	76,4	140	197	76	45	200	170	8 × M16	M8 × 1	120	22,5
PVK 100 × 5	98,3	95,5	180	237	93,5	50	240	210	12 × M16	M8 × 1	150	15
PVK 125 × 5	123,3	120,5	220	282	113,5	55	310	270	12 × M18	M8 × 1	185	15

www.lmotion.ru lmotion-mail@ya.ru Тел.:(495) 921-34-60

Support bearings FLRBU

To assist in the design and assembly process, SKF has developed a standard assortment of support bearings which consists of a housing, a bearing arrangement and seals. The bearings are adjusted at the factory to improve stiffness and running accuracy. Supports bearings are filled with greased at the SKF factory and are easy to install. Standard support bearings are specifically designed for roller screws with nominal diameters from to 8 mm to 80 mm (planetary roller screws) and from 8 mm to 125 mm (recirculating roller screws). These support bearings can easily be mounted on the screw shaft ends, following SKF recommendations for standard machined ends.

For larger roller screws, a preselection of spherical roller thrust bearings is also available.

Support bearings description

Design features	User benefits
Precision machined steel housing	Complete support bearing solution ready to use, simplified application design, easy ordering process Eliminates most technical risks associated with bearing and seal assemblies
Preloaded SKF Explorer angular contact ball bearings, 72 or 73 series, arranged back–to–back (1 + 1 for FLRBU1 and FLRBU2, 2 + 2 for FLRBU3 to FLRBU9 and 3 + 3 for FLRBU9)	Bearing solutions offering high speed capability and low friction torque Bearings are arranged back-to-back and preloaded to increase stiffness and improve running accuracy
Two garter seals	Greased for life
Precision KMT locknut as standard	KMT locknuts are part of the standard SKF product assortment, and can be ordered separately
Standard screw shaft end machining defined for extremely heavy axial loads	Quick connection to shaft ends
Different bearing arrangements are available on request, should the applications present unique load conditions with the axial loads predominantly acting in one direction (1 + 3 or 3 +1)	Bearing load carrying capacity matched to the roller screw load carrying capacity and application conditions
SKF spherical roller thrust bearings for extremely heavy axial loads	Support bearing dimensioning and load carrying capacity matched to the roller screw characteristics

FLRBU sizes 1 to 9 with angular contact ball bearings

The standard assortment of support bearings consist of a steel housing and two to six angular contact ball bearings. Support bearing size FLRBU9 is available with a total of four or six bearings (→ **pages 104** to **108**).

To attain the nominal life of the support bearings, the maximum static or dynamic operating load should not exceed 80% of the C_a value of the support bearing. This recommendation considers the load carrying capacity of the bearings, the strength of the support bearing housing and the KMT locknut.

Larger support bearing sizes with spherical roller thrust bearings

For extremely high load applications, SKF has preselected sizes of spherical roller thrust bearings for assembly with back–to–back arrangement into larger support bearings. These support bearings are typically used in applications where there are extremely heavy axial loads in one direction and lighter loads in the other direction, e.g. presses. As a result, these assemblies typically have two different size bearings, supporting the application axial loads in each direction, and requiring the support bearing to be oriented correctly (→ **fig. 24**, **page 109**).

For additional information about optimizing the selection of each spherical roller thrust bearing, please contact your local SKF representative.

www.lmotion.ru lmotion-mail@ya.ru Тел.:(495) 921-34-60

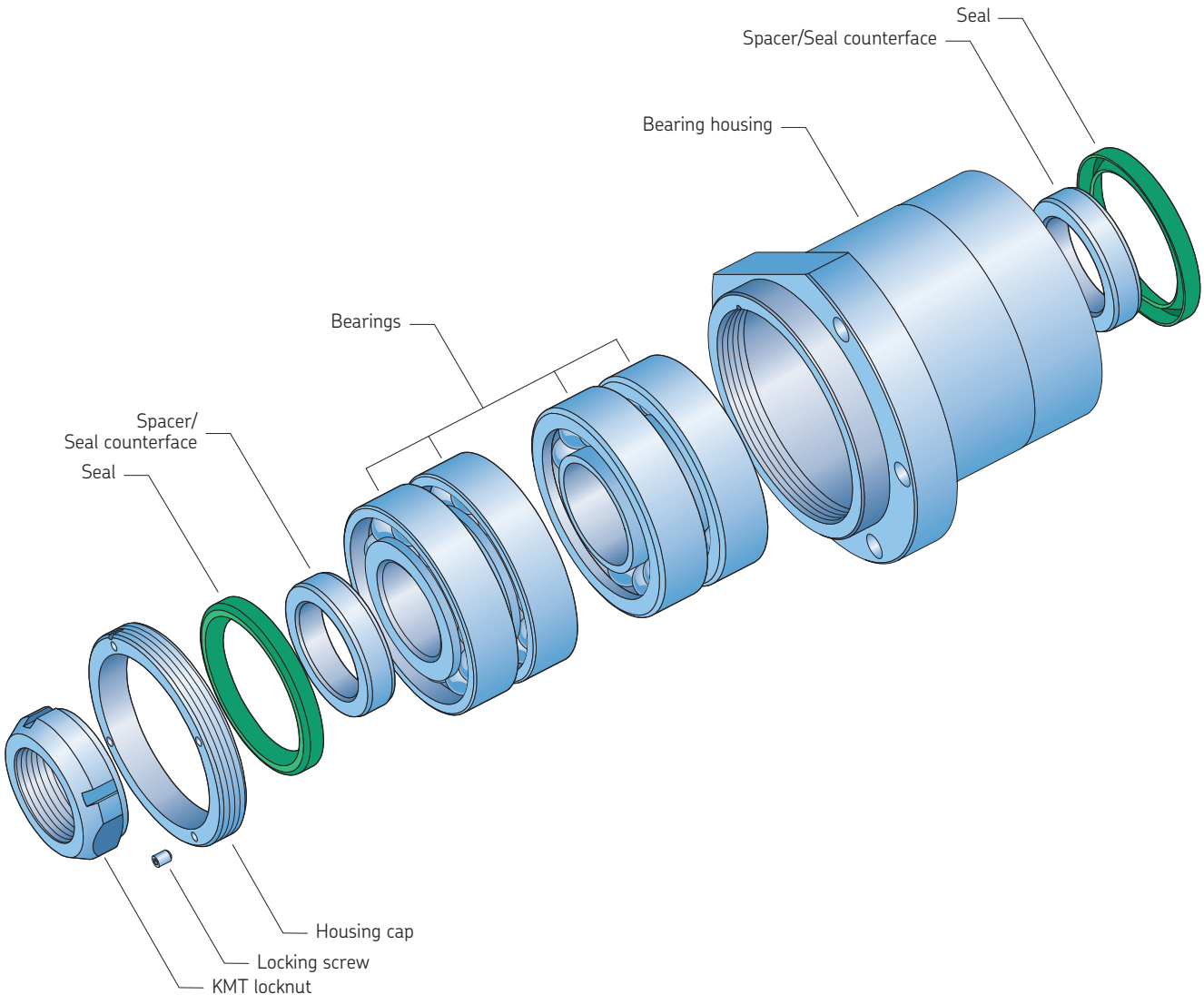

www.lmotion.ru lmotion-mail@ya.ru Тел.:(495) 921-34-60

FLRBU support bearings with angular contact ball bearings

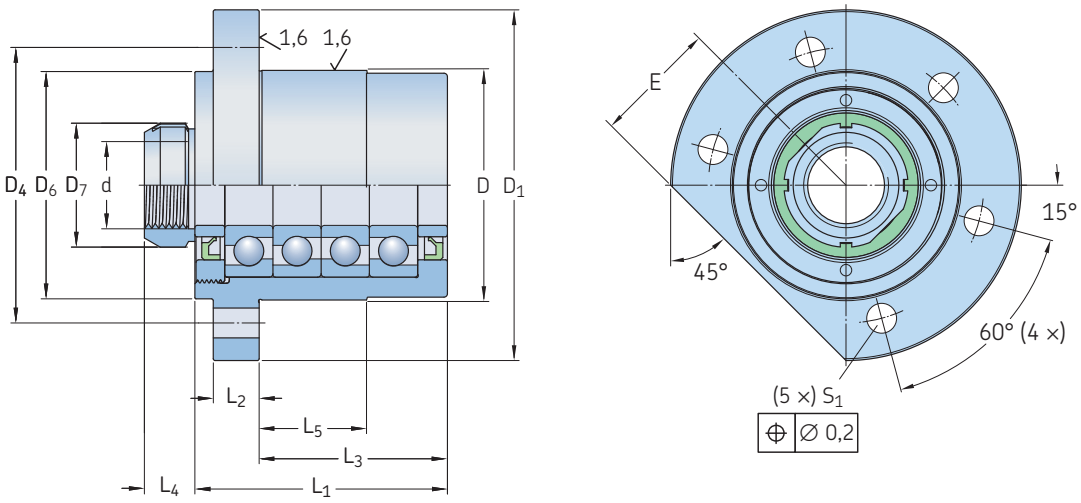

Support bearings bore diameter d	Support bearing carrying capacity Dynamic C_a	Static C_{0a}	Standard bearing arrangement	Bearing designation	Maximum preload torque	Axial stiffness of the bearing stack[1) 2)]	High precision KMT locknut Designation	Hook spanner	Tightening torque	Grub screw size	Grub screw tightening torque	Support bearing designation
mm	kN		–	–	Nm	N/µm	–	–	Nm	–	Nm	–
12	13,3	14,7	1 + 1	7 201	0,1	150	KMT 1	HN 3	15	M5	4,5	**FLRBU1**
17	27,9	31,9	1 + 1	7 303	0,25	190	KMT 3	HN 4	22	M6	8	**FLRBU2**
20	40,1	63,8	2 + 2	7 204	0,25	475	KMT 4	HN 5	27	M6	8	**FLRBU3**
25	74,2	119	2 + 2	7 305	1,1	600	KMT 5	HN 5	38	M6	8	**FLRBU4**
35	109	188	2 + 2	7 307	1,1	785	KMT 7	HN 7	65	M6	8	**FLRBU5**
50	208	392	2 + 2	7 310	1,5	1 100	KMT 10	HN 10	110	M8	18	**FLRBU6**
65	305	615	2 + 2	7 313	2	1 400	KMT 13	HN 14	200	M8	18	**FLRBU7**
90	473	1 123	2 + 2	7 318	2,3	1 800	KMT 18	HN 18	300	M10	35	**FLRBU8**
100	615	1 600	2 + 2	7 320	3	2 100	KMT 20	HN 20	400	M10	35	**FLRBU9 (2 + 2)**
100	817	2 400	3 + 3	7 320	3,5	2 600	KMT 20	HN 20	400	M10	35	**FLRBU9 (3 + 3)**

Support bearings bore diameter d	Dimensions D_1	D_6	D h7	D_4	D_7	E	L_1	L_2	L_3	L_4	L_5	S_1 H13	Fixing screws	Support bearing designation
mm													–	–
12	76	50	47	63	30	27	42	10	25	14	12	6,6	M6 × 25	**FLRBU1**
17	90	62	60	76	37	32	46	10	32	18	18	6,6	M6 × 25	**FLRBU2**
20	90	59	60	74	40	32	77	13	60	18	30	9	M8 × 25	**FLRBU3**
25	120	80	80	100	44	44	89	16	68	20	36	11	M10 × 30	**FLRBU4**
35	140	99	100	120	54	54	110	20	82	22	47	13	M12 × 40	**FLRBU5**
50	171	130	130	152	75	67	140	25	98,5	25	58,5	13	M12 × 40	**FLRBU6**
65	225	170	170	198	95	87	180	30	133,5	28	53,5	17,5	M16 × 55	**FLRBU7**
90	285	219	220	252	125	115	235	35	179	32	99	22	M20 × 65	**FLRBU8**
100	322	249	250	285	135	130	253	36	195	32	115	24	M22 × 70	**FLRBU9 (2 + 2)**
100	322	249	250	285	135	130	347	36	289	32	115	24	M22 × 70	**FLRBU9 (3 + 3)**

[1)] Axial stiffness of the housing and bearings assembly, KMT locknut and shaft stiffness not included
[2)] Axial stiffness is calculated under F = 10% of C_a

www.lmotion.ru lmotion-mail@ya.ru Тел.:(495) 921-34-60

Standard machined ends

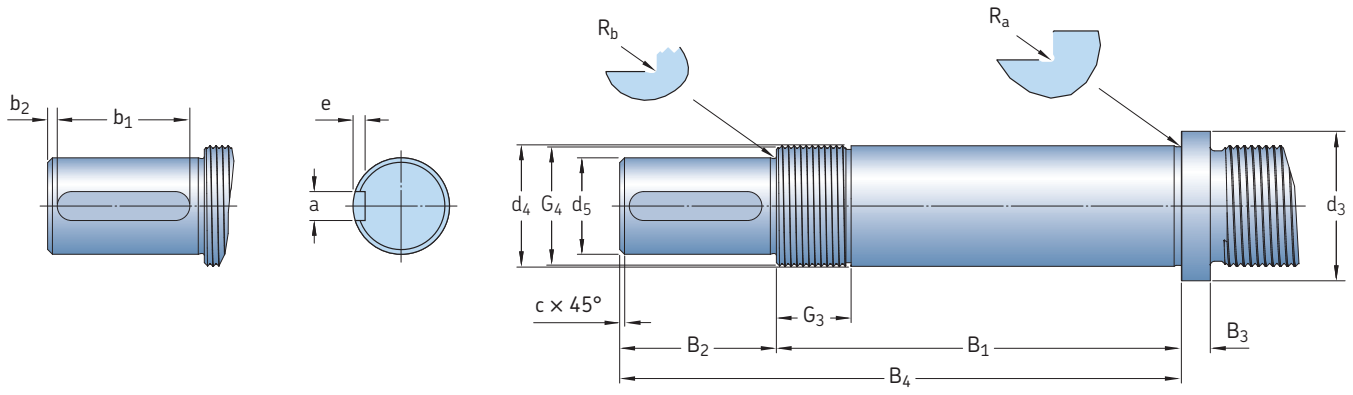

Dimensions																Support bearing designation
d_4 [1]	d_5 h7	d_3	B_1 js12	B_2	B_3	B_4 js12	G_4 6g	G_3	c	R_a	R_b	a N9	e + 0,1	b_1 + 0,5	b_2	
mm																–
12	10	17	58	20	5	78	M12 × 1	17	0,5	0,4	0,4	3	1,8	16	1,5	**FLRBU1**
17	15	23	66	30	5	96	M17 × 1	22	0,5	0,6	0,6	5	3	25	2	**FLRBU2**
20	17	27	97	40	7	137	M20 × 1	22	0,5	0,6	0,6	5	3	35	2	**FLRBU3**
25	20	34	112	45	7	157	M25 × 1,5	25	0,5	0,6	0,6	6	3,5	40	2,5	**FLRBU4**
35	30	45	134	55	10	189	M35 × 1,5	26	1	0,6	0,6	8	4	45	2,5	**FLRBU5**
50	40	62	168	65	12	233	M50 × 1,5	31	1	0,8	0,8	12	5	55	4	**FLRBU6**
65	60	78	210	100	18	310	M65 × 2	32	1	1,2	1	18	7	90	2,5	**FLRBU7**
90	85	108	270	120	25	390	M90 × 2	39	1	1,6	1,2	25	9	100	5	**FLRBU8**
100	95	120	288	140	25	428	M100 × 2	39	1	1,6	1,2	25	9	125	7	**FLRBU9 (2 + 2)**
100	95	120	382	140	25	522	M100 × 2	39	1	1,6	1,2	25	9	125	7	**FLRBU9 (3 + 3)**

[1] Standard tolerance for direct drive: d_4h6. Recommended tolerance for parallel drive: d_4k6

www.lmotion.ru lmotion-mail@ya.ru Тел.:(495) 921-34-60

Recommendations for support bearings assembly and orientation

Standard support bearing orientation: Flange oriented towards machined end of shaft

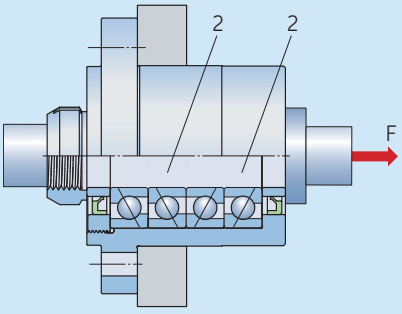

FLRBU (1 + 1) (2 + 2) (3 + 3)
- Assembly recommended for similar tension and compression loads on roller screw
- Customer to check flange fixing bolts with compression loads

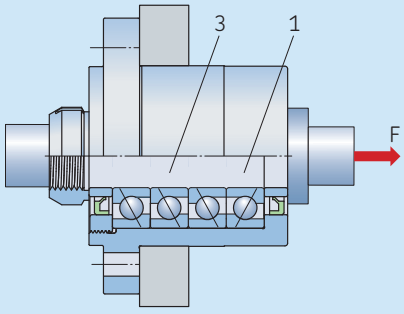

FLRBU (3 + 1)
- Assembly recommended for predominantly tension loads on roller screw
- Customer to check flange fixing bolts with compression loads

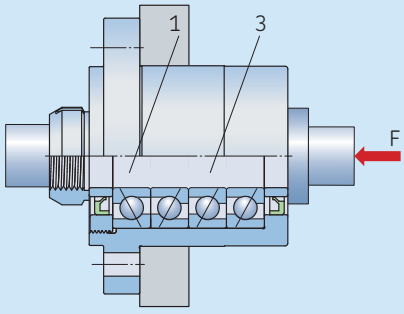

FLRBU (1 + 3)
- Not the ideal assembly in case of predominantly compression loads on roller screw
- Customer to check flange fixing bolts with compression loads

Non-standard support bearing orientation: Flange oriented towards thread of roller screw shaft

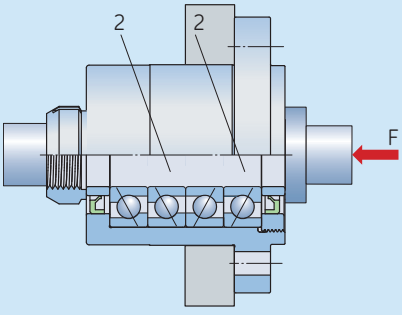

FLRBU (1 + 1) (2 + 2) (3 + 3)
- Assembly recommended for similar tension and compression loads on roller screw
- Customer to check flange fixing bolts with tension loads

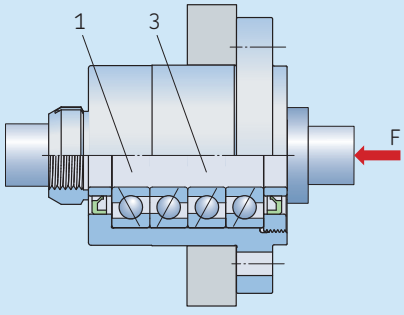

FLRBU (3 + 1)
- Assembly recommended for predominantly compression loads on roller screw
- Customer to check flange fixing bolts with tension loads

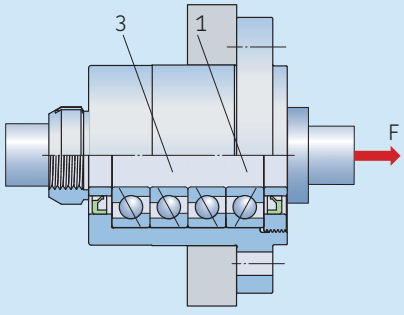

FLRBU (1 + 3)
- Not the ideal assembly in case of predominantly tension loads on roller screw
- Customer to check flange fixing bolts with tension loads

Support bearing bore diameter	**Load ratings for the 3 bearings carrying the main application loads** Support bearing carrying capacity		**Load ratings for the opposite single bearing** Support bearing carrying capacity		**Support bearing designation**
	Dynamic	Static	Dynamic	Static	
d	C	C_0	C	C_0	
mm	kN		kN		–
20	53,3	95,7	24,7	31,9	**FLRBU3**
25	98,6	179	45,7	59,6	**FLRBU4**
35	145	283	67,3	94,2	**FLRBU5**
50	277	589	128	196	**FLRBU6**
65	405	923	188	308	**FLRBU7**
90	628	1 685	291	561	**FLRBU8**
100	817	2 400	378	800	**FLRBU9** (version with 4 bearings)

www.lmotion.ru lmotion-mail@ya.ru Тел.:(495) 921-34-60

Support bearings recommended for standard planetary roller screws (standard number of rollers)

Planetary roller screws SR/BR, PR, HR: Recommended size of FLRBU support bearings[1)]

Nominal diameter	Nut type	Lead [mm]																
		2	4	5	6	8	9	10	12	15	18	20	24	25	30	35	36	42
d_0																		
mm	–	FLRBU size																
8	SR/BR	1	1															
8	PR	1	1															
12	SR/BR	2		2														
12	PR	1		1														
15	SR/BR	2		2		2												
15	PR	1		1		1												
18	SR/BR	3		3		3												
18	PR	2		2		2												
21	SR/BR	4		4	4	4		4										
21	PR	2		2	2	2		3										
24	SR/BR				3				4									
24	PR				2				2									
25	SR/BR			4		4		4		4								
25	PR			3		3		3		3								
30	SR/BR			5	5	5		5		5		5						
30	PR			4	4	4		4		4		4						
36	SR/BR				5		5		5		5		5					
36	PR				4		4		4		4		4					
39	SR/BR			6				6		6		6		6				
39	PR			5				5		5		5		5				
44	SR/BR					6			6		6		6		6			
44	PR					4			4		5		5		5			
48	SR/BR			6		6		6		7		7		7	7			
48	PR			5		5		6		6		6		6	6			
56	SR/BR								6				7				7	
56	PR								5				6				6	
60	SR/BR							8		8		8						
60	PR							6		6		6						
60	HR									8		8		8	8			
64	SR/BR								7		7		7		7		7	
64	PR								6		6		6		6		6	
75	SR							9 (2 + 2)		9 (2 + 2)		9 (2 + 2)						
75	HR									9 (3 + 3)		9 (3 + 3)		9 (3 + 3)	9 (3 + 3)			
80	SR							8			8		8					8

SR (C, F or P): Planetary roller screw with axial play
BR (C, F or P): Planetary roller screw without backlash
PR (U or K): Planetary roller screw with preloaded split nut
HR (C, F or P): Ultra Power planetary roller screw

1) Some SR/BR and PR planetary roller screw sizes (normal diameter ¥ lead) are available with the maximum number of rollers only. In such case, the recommended FLRBU support bearing size is suitable for these configurations

www.lmotion.ru lmotion-mail@ya.ru Тел.:(495) 921-34-60

Support bearings recommended for recirculating roller screws

Recirculating roller screws SV/BV, PV: Recommended size of FLRBU support bearings

Nominal diameter	Nut type	Lead [mm]				
		1	2	3	4	5
d_1						
mm	–	FLRBU size				
8	SV/BV	1				
8	PV	1				
10	SV/BV	1	1			
10	PV	1	1			
12	SV/BV	1	1			
12	PV	1	1			
16	SV/BV	1	1			
16	PV	1	1			
20	SV/BV	2	2			
20	PV	1	1			
25	SV/BV	3	3			
25	PV	2	2			
32	SV/BV	4	4			
32	PV	3	3			
40	SV/BV	5	4			
40	PV	4	3			
50	SV/BV	6	5	6	5	
50	PV	5	4	5	4	
63	SV/BV		6		6	
63	PV		6		6	
80	SV/BV				7	
80	PV				6	
100	SV/BV					8
100	PV					7
125	SV/BV					9 (3 + 3)
125	PV					8

SV (C or F): Recirculating roller screw with axial play
BV (C or F): Recirculating roller screw without backlash
PV (U or K): Recirculating roller screw with preloaded split nut

www.lmotion.ru lmotion-mail@ya.ru Тел.:(495) 921-34-60

Preselection of spherical roller thrust bearings

Fig. 23

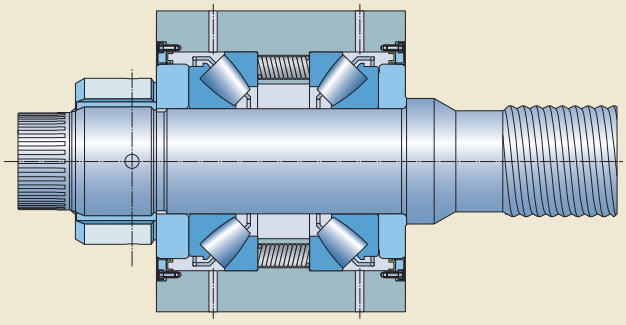

Symmetrical bearing arrangement

Fig. 24

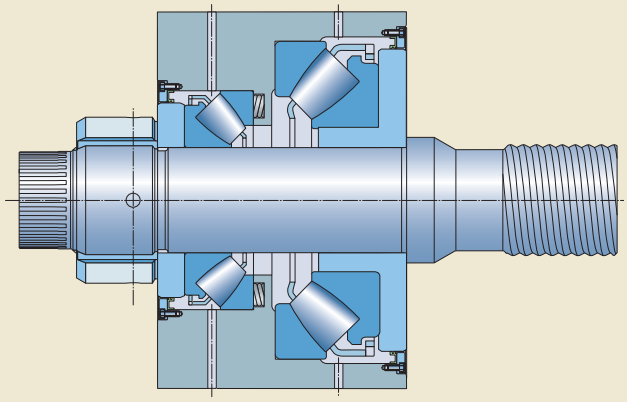

Non-symmetrical bearing arrangement

For applications where FLRBU9 support bearings cannot accommodate existing loads, SKF can supply FLRBUs containing spherical roller thrust bearings. These larger support bearings complement the assortment of large roller screws and Ultra Power roller screws.

Spherical roller thrust bearing arrangements can be either symmetrical or non-symmetrical. Non-symmetrical arrangements are typically used when loads are heavier on one direction than the other.

Because these support bearings are used on large machinery, SKF designs the housing and bearing arrangement on a case by case basis.

For additional information about these support bearings, please contact your local SKF representative.

B.6

Preselection of spherical roller thrust bearings (see recommendation in SKF catalogue *Rolling bearings*)

Ultra Power roller screws		Recommended size of spherical roller thrust bearings						
		Bore diameter	Outer diameter	Bearing mean diameter	Height	Basic load rating Dynamic	Static	Bearing designation[1]
d_0	P_h	d	D	d_m	H	C	C_0	
mm		mm				kN		–
87	15 to 30	110	230	170	73	1 180	3 000	**29422 E**
99	15 to 35	130	270	200	85	1 560	4 050	**29426 E**
112,5	15 to 35	140	280	210	85	1 630	4 300	**29428 E**
120	15 to 40	150	300	225	90	1 860	5 100	**29430 E**
135	15 to 50	160	320	240	95	2 080	5 600	**29432 E**
150	15 to 50	170	340	255	103	2 360	6 550	**29434 E**
180	15 to 50	200	400	300	122	3 200	9 000	**29440 E**
210	20 to 50	240	440	340	122	3 400	10 200	**29448 E**
240	20 to 50	260	480	370	132	4 050	12 900	**29452 E**

[1] *SKF Explorer bearing*

www.lmotion.ru lmotion-mail@ya.ru Тел.:(495) 921-34-60

For selection and dimensioning of spherical roller thrust bearings, for recommendations regarding minimum load, calculation of equivalent dynamic/static bearing loads, lubrication, design of bearing arrangements and mounting, please refer to SKF catalogue *Rolling bearings*.
In particular, the following calculation assumptions must be used:

- The maximum axial load must not exceed a quarter of the bearing static load rating

$s_0 = C_0/F$
$s_0 \geq 4$

With
C_0 = bearing static load carrying capacity [kN]
F = maximum static or dynamic axial load applied to the roller screw and to the bearing carrying this load [kN]

- The permissible rotational speed of the bearing depends on the ratio of dynamic load rating to bearing equivalent mean load F_m

If $C/F_m \leq 4$
→ Maximum $n\, d_m = 60\,000$

With $C/F_m = 8$
→ Maximum $n\, d_m = 120\,000$

If $C/F_m \geq 15$
→ Maximum $n\, d_m = 200\,000$

With
C = bearing dynamic load carrying capacity [kN] according to the SKF catalogue *Rolling bearings*
F_m = equivalent dynamic load applied to the roller screw and to the spherical roller thrust bearing carrying this axial load [kN]
n = screw shaft rotational speed [r/min]
d_m = bearing mean diameter [mm]

www.lmotion.ru lmotion-mail@ya.ru Тел.:(495) 921-34-60

Calculation formulae and example

Calculation formulae

Basic life rating

$$L_{10} = \left(\frac{C_a}{F_m}\right)^3$$

Required load rating

$$C_{req} = F_m \, (L_{10\,req})^{1/3}$$

where
L_{10} = basic rating life [million revolutions]
C_a = basic dynamic load rating [N]
C_{req} = required dynamic load rating [N]
F_m = cubic mean load [N]
$L_{10\,req}$ = required life [million revolutions]

Equivalent mean load

- Duty cycle with step loading

$$F_m = \left(\frac{\Sigma F_i^3 \, l_i}{\Sigma l_i}\right)^{1/3}$$

where
l_i = length of stroke segment i
F_i = load during stroke i
F_i can be either a fixed value, or a calculation for continuous load varing cycles

- Duty cycle with continuous load variation

$$F_m = \frac{F_{min} + 2\,F_{max}}{3}$$

where
F_{min} = minimum load
F_{max} = maximum load

Critical speed of screw shaft (no safety factor)

$$n_{cr} = 49 \times 10^6 \frac{f_1 \, d_2}{l_{cr}}$$

where
n_{cr} = critical speed [r/min]
d_2 = screw shaft root diameter [mm]
l_{cr} = free length, or distance between the two supports [mm]
f_1 = mounting factor
0,9 ●●—— fixed, free (→ **fig. 25**)
2,5 ●—● radial support, radial support (→ **fig. 26**)
3,8 ●●—● fixed, radial support (→ **fig. 27**)
5,6 ●●—●● fixed, fixed (→ **fig. 28**)

Notes:

- For each particular application, the most unfavorable conditions must be considered
- It is generally recommended to apply a safety factor of 0,8 to the calculated value of the critical speed n_{cr} of the screw shaft.

Speed limit of the mechanism (maximal speed applied through very short periods)

$n\,d_0 \leq 160\,000$ for all types of planetary roller screws

$n\,d_1 \leq 30\,000$ for SV, BV, PV with $d_1 \leq 25$ mm

$n\,d_1 \leq 20\,000$ for SV, BV, PV with $d_1 > 25$ mm

where
n = rotational speed [r/min]
d_0 = screw shaft nominal diameter for all types of planetary roller screws [mm]
d_1 = screw shaft nominal diameter for recirculating roller screws [mm]

Maximum permissible acceleration:
12 000 rad/s² for all types of planetary roller screws
4 000 rad/s² for all types of recirculating roller screws

Fig. 25
Mounting factor f_1 = 0,9

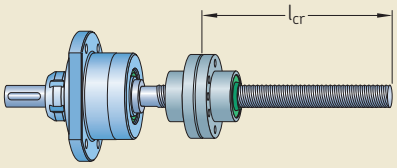

Fig. 26
Mounting factor f_1 = 2,5

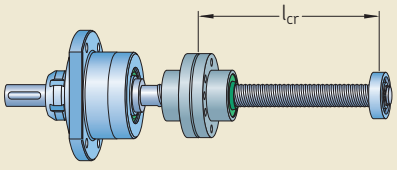

Fig. 27
Mounting factor f_1 = 3,8

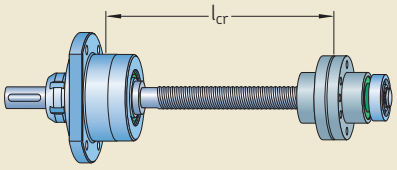

Fig. 28
Mounting factor f_1 = 5,6

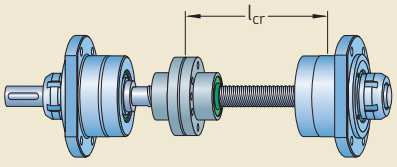

C

www.lmotion.ru lmotion-mail@ya.ru Тел.:(495) 921-34-60

Buckling strength with safety factor 3

$$F_c = \frac{34 \times 10^3 f_3 d_2^4}{l_{Fc}^2}$$

where
F_c = buckling strength [N]
d_2 = screw shaft root diameter [mm]
l_{Fc} = distance between the fixed support bearing and the extended position of the nut [mm]
f_3 = mounting factor
0,25 ●● fixed, free (→ **fig. 29**)
2 ●●— fixed, radial support (→ **fig. 30**)
4 ●●—●● fixed, fixed (→ **fig. 31**)

Fig. 29

Mounting factor f_3 = 0,25

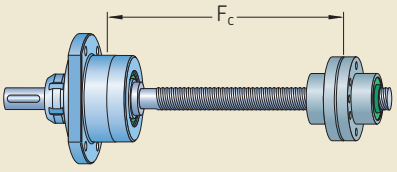

Fig. 30

Mounting factor f_3 = 2

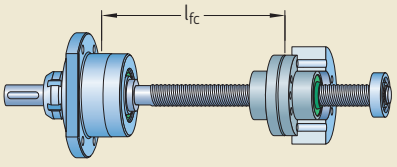

Fig. 31

Mounting factor f_3 = 4

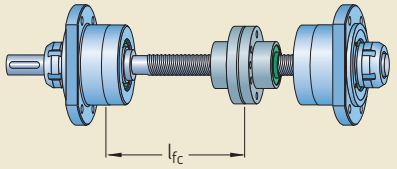

Helix angle

$$\alpha = \text{Atan}\left(\frac{P_h}{\pi d}\right)$$

where
d = nominal diameter of screw shaft [mm]
- d_0 for SR planetary roller screws
- d_1 for SV recirculating roller screws
- D_0 for ISR inverted roller screws

P_h = lead [mm]

Theoretical efficiencies

Direct (→ **diagram 2**, **page 22**)

$$\eta = \frac{1}{1 + \frac{\pi d}{P_h}\mu_{ref}}$$

where
μ_{ref} is extracted from the coefficient of friction diagram (→ **diagram 1 page 22**)
α = helix angle [°]
d = nominal diameter of screw shaft [mm]
- d_0 for SR planetary roller screws
- d_1 for SV recirculating roller screws
- D_0 for ISR inverted roller screws

P_h = lead [mm]

Indirect (→ **diagram 3**, **page 22**)

$$\eta' = 2 - \frac{1}{\eta}$$

Practical efficiencies

Direct (→ **diagram 2**, **page 22**)

$$\eta_p = \frac{1}{1 + \frac{\pi d}{P_h}\mu_{prac}}$$

where
μ_{prac} is extracted from the coefficient of friction diagram (→ **diagram 1**, **page 22**)
α = helix angle [°]
d = nominal diameter of screw shaft [mm]
- d_0 for SR planetary roller screws
- d_1 for SV recirculating roller screws
- D_0 for ISR inverted roller screws

P_h = lead [mm]

Indirect (→ **diagram 3**, **page 22**)

$$\eta'_p = 2 - \frac{1}{\eta_p}$$

Input torque in a steady state

$$T = \frac{F P_h}{2\,000\,\pi\,\eta_p}$$

where
T = input torque [Nm]
F = external load [N]
P_h = lead [mm]
η_p = practical direct efficiency

Power requirement in a steady state

$$P = \frac{F n P_h}{60\,000\,\eta_p}$$

where
P = power required [W]
n = revolutions per minute [r/min]

Preload torque

$$T_{pr} = \frac{F_{pr} P_h}{1\,000\,\pi}\left(\frac{1}{\eta_p} - 1\right)$$

where
T_{pr} = preload torque [N]
F_{pr} = preload force [N]

Braking torque (the restraining torque considered in a back–driving system)

$$T_b = \frac{F P_h \eta'}{2\,000\,\pi}$$

where
T_b = braking torque [Nm]
F = external load [N]

To consider the worst case conditions, we use the theoretical indirect efficiency.

www.lmotion.ru lmotion-mail@ya.ru Тел.:(495) 921-34-60

Nominal motor torque during acceleration

For a horizontal screw

$$T_t = T_f + T_{pr} + \frac{P_h (F + m_L \mu_f g)}{2\,000\,\pi\,\eta_p} + \dot{\omega}\,\Sigma I$$

For a vertical screw

$$T_t = T_f + T_{pr} + \frac{P_h (F + m_L g)}{2\,000\,\pi\,\eta_p} + \dot{\omega}\,\Sigma I$$

where
T_t = driving torque [Nm]
T_f = friction torque in support bearings, motors, seals, etc... [Nm]
T_{pr} = preload torque [Nm]
μ_f = coefficient of friction of guidance systems
$\dot{\omega}$ = angular acceleration [rad/s²]
m_L = mass in movement [kg]
g = acceleration of gravity [9,8 m/s²]
$\Sigma I = I_M + I_L + I_S\, l\, 10^{-9}$

where

$$I_L = m_L \left(\frac{P_h}{2\pi}\right)^2 10^{-6}$$

where
I_M = inertia of motor [kgm²]
I_S = inertia of screw shaft per meter [kgmm²/m]
l = length of screw shaft [mm]

For a hollow shaft, the actual inertia is calculated as follows:

$$I_{S\,actual} = I_S\, l\, 10^{-9} \left(\frac{d_0^4 - d_b^4}{d_0^4}\right)$$

where
d_b = bore diameter of the shaft [mm]

Nominal braking torque during deceleration

For a horizontal screw

$$T'_b = \frac{P_h\,\eta' [F + m_L\,\mu_f\,g]}{2\,000\,\pi} + \dot{\omega}\,\Sigma I - T_f - T_{pr}$$

For a vertical screw

$$T'_b = \frac{P_h\,\eta' [F + m_L\,g]}{2\,000\,\pi} + \dot{\omega}\,\Sigma I - T_f - T_{pr}$$

where
T'_b = braking torque during deceleration [Nm]

Static axial stiffness of a complete roller screw assembly

$$\frac{1}{R_t} = \frac{1}{R_s} + \frac{1}{R_n} + \frac{1}{R_p}$$

where
R_t = stiffness of a complete assembly [N/µm]
R_s = shaft stiffness [N/µm]
R_n = nut stiffness [N/µm]
R_p = support bearings stiffness [N/µm]

Shaft stiffness

Fixed–free or fixed–radial support

$$R_s = 165\,\frac{d_2^2}{l_{s1}}$$ (→ **fig. 32**)

Fixed–fixed assembly

$$R_s = \frac{165\,d_2^2\,l_s}{l_{s1}\,(l_s - l_{s1})}$$ (→ **fig. 33**)

Note:
The lowest stiffness is reached when the nut is in central position

$$l_{s1} = \frac{l_s}{2} \Rightarrow R_s = \frac{165\,d_2^2}{l_s} \times 4$$

where
l_{s1} = distance between center of fixed support bearing and center of nut [mm]
l_s = distance between centers of fixed support bearings

For additional information, please contact your local SKF representative.

Fig. 32

Configuration with fixed support and radial support for stiffness calculation

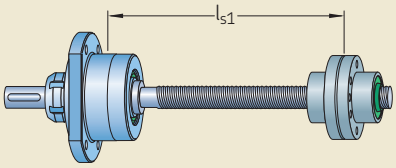

Fig. 33

Configuration with two fixed supports for stiffness calculation

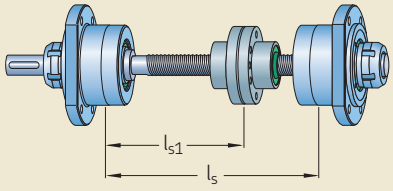

C

www.lmotion.ru lmotion-mail@ya.ru Тел.:(495) 921-34-60

Calculation example

- Customer wishes to select a planetary roller screw for his application
- To achieve the required linear speed of the application, customer has preselected a lead of 20 mm. Screw rotational speed is 600 r/min during the operation cycle
- Nut type should be flanged for assembly purposes
- Roller screw shaft is horizontally mounted, with one fixed end on the start position, and the other end on radial support
- Load cycle is shown in **diagram 12**
- Operation is 1 cycle/minute, 7 hours/day, 260 days /year for 5 years minimum

Diagram 12

Application load cycle

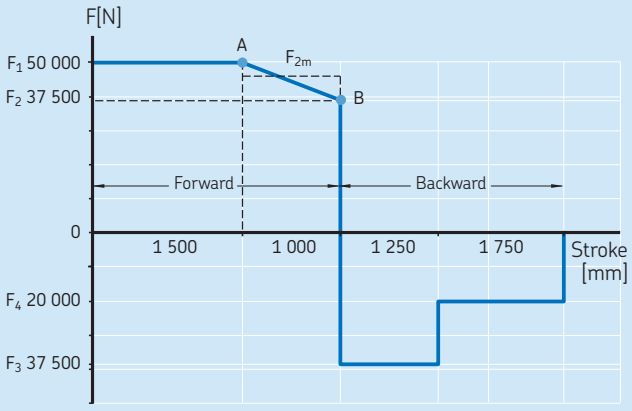

Calculation of equivalent mean load F_m

F_1 = 50 000 N on L_1 = 1 500 mm

$$F_{2m} = \frac{2F_1 + F_2}{3} = 45\,833 \text{ N} \quad \text{on } L_2 = 1\,000 \text{ mm}$$

F_3 = 37 500 N on L_3 = 1 250 mm

F_4 = 20 000 N on L_4 = 1 250 mm

$$F_m = \sqrt[3]{\frac{50\,000^3 \times 1\,500 + 45\,833^3 \times 1\,000 + 37\,500^3 \times 1\,250 + 20\,000^3 \times 1\,250}{1\,500 + 1\,000 + 1\,250 + 1\,250}}$$

F_m = 41 590 N

Calculation of required dynamic carrying capacity $C_{a\ req}$

With consideration to the operational cycle:
With the preselection of lead P_h = 20 mm

Minimum $L_{10} = 60 \times 7 \times 260 \times 5 = 546\,000$ cycles

$$L_{10} = 546\,000 \ \frac{1\,500 + 1\,000 + 1\,250 + 1\,250}{20}$$

$$= 136{,}5 \times 10^6 \text{ revolutions}$$

$C_{a\ req} = F_m\,(L_{10})^{1/3} = 41\,590\,(136{,}5 \times 10^6)^{1/3} = 214\,141$ N

Looking at the product tables, we find that:
SRF 48 × 20R with C_a = 265 690 N satisfies the requirement of minimum dynamic carrying capacity

Selection of support bearing

The table on **page 107** indicates that support bearing size FLRBU7 is recommended for screw type SRF 48 × 20R.
In the following calculations, we will assume that the radial support at the other end of the screw shaft has a total width of 50 mm.

Efficiencies

Theoretical direct efficiency

$$\alpha = \text{Atan}\left(\frac{P_h}{\pi\, d_0}\right) = 7{,}55°$$

Taken from the coefficient of friction reference diagram (→ **diagram 1 page 22**)

where
μ_{ref} = 0,016
μ_{prac} = 0,021

$$\eta = \frac{1}{1 + \frac{\pi\, d_0}{P_h}\,\mu_{ref}} = 0{,}892$$

www.lmotion.ru lmotion-mail@ya.ru Тел.:(495) 921-34-60

Theoretical indirect efficiency

$$\eta' = 2 - \frac{1}{\eta} = 0{,}879$$

Practical direct efficiency

We consider the practical coefficient of friction $\mu_{prac} = 0{,}021$

$$\eta_p = \frac{1}{1 + \frac{\pi\, d_0\, \mu_{prac}}{P_h}} = 0{,}863$$

Input torque in a steady state

Phase 1 has the highest application load $F_{max} = 50\,000$ N

$$T = \frac{F\, P_h}{2\,000\, \pi\, \eta_p} = \frac{50\,000 \times 20}{2\,000\, \pi\, 0{,}863} = 184{,}4 \text{ Nm}$$

Power requirement in a steady state

Phase 1 has the highest application load $F_{max} = 50\,000$ N
Rotational speed is 600 r/min

$$P = \frac{50\,000 \times 600 \times 20}{60\,000 \times 0{,}863} = 11\,587 \text{ W}$$

Braking torque

Phase 1 has the highest application load $F_{max} = 50\,000$ N

$$T_b = \frac{50\,000 \times 20 \times 0{,}879}{2\,000\, \pi} = 139{,}9 \text{ Nm}$$

Critical speed of screw shaft

For the critical speed evaluation, we have to consider the most critical configurations for the screw, where we encounter the longest shaft free length. In the present case study, the two most critical configurations are:

A) Nut at start position (zero stroke) that gives a free length of 2 608,5 mm between the center of the nut and the center of the radial support at the end of the shaft (→ **page 116** and **fig. 34**).

In this configuration, the mounting conditions are supported/supported with a corresponding factor $f_1 = 2{,}5$

The root diameter $d_2 = 45{,}5$ mm, the calculated critical speed is:

$$n_{cr} = 49 \times 10^6 \frac{2{,}5 \times 45{,}5}{2\,608{,}5^2} = 819 \text{ r/min}$$

By applied a safety factor of 0,8:

$n_{cr} \times 0{,}8 = 819 \times 0{,}8 = 655$ r/min > 600 r/min ⇒ Ok

B) Nut at full stroke of 2 500 mm that gives a free length of 2 719,5 mm between the center of the nut and the center of the fixed support bearing (→ **page 116**, **fig. 35**).

In this configuration, the mounting conditions are fixed/supported with corresponding factor $f_1 = 3{,}8$

The calculation is:

$$n_{cr} = 49 \times 10^6 \frac{3{,}8 \times 45{,}5}{2\,719{,}5^2} = 1\,146 \text{ r/min}$$

$n_{cr} \times 0{,}8 = 1146 \times 0{,}8 = 917$ r/min > 600 r/min ⇒ Ok

Speed limit

$n\, d_0 = 600 \times 48 = 28\,000 < 160\,000$ ⇒ Ok

Buckling strength with safety factor = 3

We must consider two critical situations for calculating the buckling strength.

Point (**A**) (→ **diagram 12**, **page 114**) with maximum application load at end of phase 1 (travel = 1 500 mm) (→ **fig. 36**, **page 116**).

In this configuration, the mounting conditions are fixed/supported with corresponding factor $f_3 = 2$

$$F_c = \frac{34 \times 10^3 \times 2 \times 45{,}5^4}{1\,719{,}5^2} = 98\,571 \text{ N} > F_1 = 50\,000 \text{ N} \Rightarrow \text{Ok}$$

Point (**B**) (→ **diagram 12**, **page 114**) with lower application load and longer total travel of 2 500 mm at end of phase 2 (→ **fig. 37**, **page 116**)

$$F_c = \frac{34 \times 10^3 \times 2 \times 45{,}5^4}{2\,719{,}5^2} = 39\,407 \text{ N} > F_2 = 37\,500 \text{ N} \Rightarrow \text{Ok}$$

Same case with customer selecting a preloaded roller screw

Should the customer prefer a preloaded roller screw for the application in order to have a stiffer assembly, then the initial selection would be:
PRK 60 × 20R with $C_a = 217\,610$ N
Now check this screw against all dimensioning parameters.

www.lmotion.ru lmotion-mail@ya.ru Тел.:(495) 921-34-60

Fig. 34

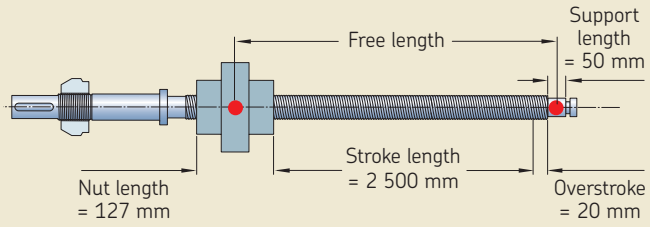

Free length = 127/2 + 2 500 + 20 + 50/2 = 2 608,50

Fig. 35

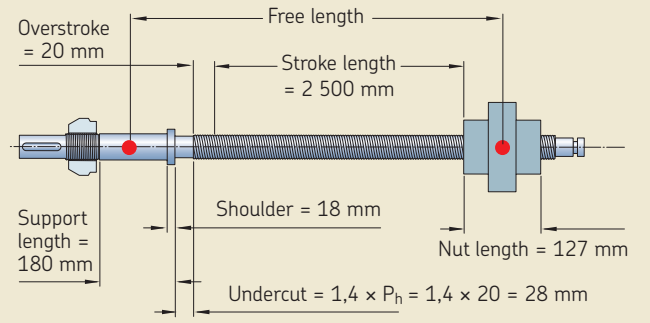

Free length = 127/2 + 2 500 + 20 + 28 + 18 + 180/2 = 2 719,50

Fig. 36

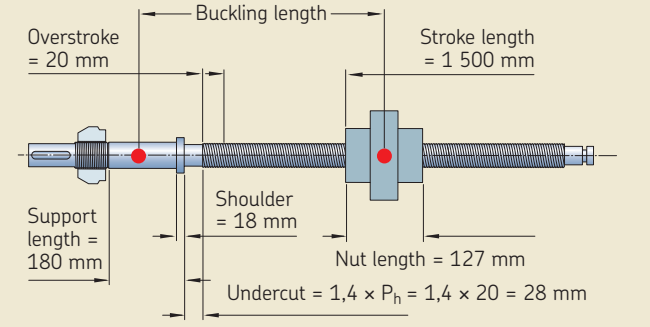

Buckling length = 127/2 + 1 500 + 20 + 28 + 18 + 180/2 = 1 719,50

Fig. 37

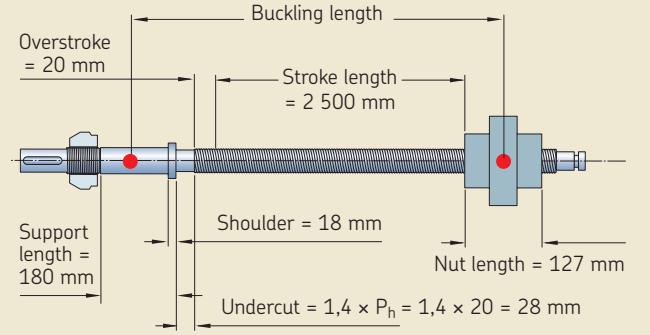

Buckling length = 127/2 + 2 500 + 20 + 28 + 18 + 180/2 = 2 719,50

Efficiencies

Theoretical direct efficiency

$$\alpha = \text{Atan}\left(\frac{P_h}{\pi\, d_0}\right) = 6{,}05°$$

Taken from the coefficient of friction reference diagram (→ **diagram 1**, **page 22**)

where
μ_{ref} = 0,013
μ_{prac} = 0,017

$$\eta = \frac{1}{1 + \frac{\pi\, d_0\, \mu_{ref}}{P_h}} = 0{,}891$$

Theoretical indirect efficiency

$$\eta' = 2 - \frac{1}{\eta} = 0{,}877$$

Practical direct efficiency

We consider the practical coefficient of friction
μ_{prac} = 0,017

$$\eta = \frac{1}{1 + \frac{\pi\, d_0\, \mu_{prac}}{P_h}} = 0{,}862$$

Input torque in a steady state

Phase 1 has the highest application load F_{max} = 50 000 N

$$T = \frac{50\,000 \times 20}{2\,000\,\pi\, 0{,}862} = 184{,}6 \text{ Nm}$$

Power requirement in a steady state

Phase 1 has the highest application load F_{max} = 50 000 N
Rotational speed is 600 r/min

$$P = \frac{50\,000 \times 600 \times 20}{60\,000 \times 0{,}862} = 11\,600 \text{ W}$$

www.lmotion.ru lmotion-mail@ya.ru Тел.:(495) 921-34-60

Braking torque

Phase 1 has the highest application load F_{max} = 50 000 N

$$T_b = \frac{F\ P_h\ \eta'}{2\ 000\ \pi} = \frac{50\ 000 \times 20 \times 0{,}877}{2\ 000\ \pi} = 139{,}6\ \text{Nm}$$

Critical speed of screw shaft

Screw type PRK 60 × 20R has a larger nominal diameter and a larger root diameter than screw type SRF 48 × 20R that was already calculated. Therefore, the critical speed will not be a problem for screw size PRK 60 × 20R.

Axial stiffness

In product table on **page 72**, we find that nominal preload F_{pr} = 2 326 N

First, we confirm that the internal preload is appropriate for the application:

- Minimum application load in phase 4: F_4 = 20 000 N
- F_4 is greater than 2,83 × 2 326 N = 6 583 N

This is to make sure that the nut half that does not carry the load is completely unloaded and does not face marginal loading with risk of sliding. Nominal preload F_{pr} = 2 326 N is OK for the application.

Under this nominal preload conditions (F_{pr} = 2 326 N), the minimum nominal stiffness of the nut is R_{ng} = 700 N/µm (product table on **page 72**).

Total axial stiffness of the roller screw is:

$$\frac{1}{R_t} = \frac{1}{R_s} + \frac{1}{R_{ng}}$$

At point (**B**) (**→ diagram 12**, **page 114**), full stroke:
With d_2 = 57,5 mm for roller screw size PRK 60 × 20R

$$R_s = 165\ \frac{57{,}5^2}{2719{,}5} = 201\ \text{N/µm}$$

$$\frac{1}{R_t} = \frac{1}{201} + \frac{1}{700} \Rightarrow R_t = 156\ \text{N/m at full stroke}$$

If we include the axial stiffness of the fixed support bearing FLRBU7, we calculate the total system stiffness:
R support bearing = 1 250 N/µm

$$\frac{1}{R_{\text{total system}}} = \frac{1}{R_s} + \frac{1}{R_{ng}} + \frac{1}{R_{\text{bearing}}} = \frac{1}{201} + \frac{1}{700} + \frac{1}{1\ 250}$$

$\Rightarrow R_{\text{total system}}$ = 139 N/µm at full stroke

C

www.lmotion.ru lmotion-mail@ya.ru Тел.:(495) 921-34-60

Recommendations for assembly

Handling

Roller screw assemblies are precision components and should be handled with care to avoid damaging shocks, contamination or corrosion. After cleaning, avoid touching the screws with bare hands. Unprotected screws made of standard bearing steel are very sensitive to corrosion.

Storage

Roller screw assemblies should be stored so that they are not exposed to contaminants, vibrations, shocks, humidity or other detrimental conditions.

During shipping, roller screw assemblies are wrapped in heavy gauge plastic bags, which protect them from solid or liquid contaminants. They should remain in the shipping crate and wrapped until they are used.

If they are stored out of the shipping crate, roller screw assemblies must lie on wooden, plastic or aluminum V–shaped blocks and should not be subjected to vibrations. The V–shaped supports should be positioned on the threaded section of the screw shaft, or on the machined ends. The assembly must not be supported on the shelf by the nut body (→ **fig. 38**).

The standard rust inhibitor protects roller screws in their original sleeve for a period of 12 to 18 months. Storage temperature should range between – 10 and +50 °C. For longer storage periods, special packing such as VCI sleeve can be used. For additional information about roller screw storage, please contact your local SKF representative.

Nut disassembly

If possible, do not remove the nut from the shaft, especially for preloaded assemblies. If the nut must be removed from the shaft, i.e. for shaft end machining, check the nut orientation before disassembly.

Identify the type of nut by removing one wiper.

Fig. 41: Planetary roller screw

Fig. 42: Recirculating roller screw

For a recirculating roller screw with a nominal diameter < 16 mm, the nut should never be removed from the screw without using a sleeve (risk of losing the rollers).

For the other recirculating roller screws and for all planetary roller screws, the nut can be removed without any risk. But if the nut is fitted with wipers (components usually are black or white), SKF recommends marking the wipers and their angular position in relation to the nut (→ **fig. 40**) to facilitate the reassembly process.

In order to achieve the proper axial play or preload required by the application, each nut is matched to its shaft. Therefore, special attention must be paid not to mix nuts and shafts during disassembly.

Just changing the orientation of a preloaded nut onto its matched screw shaft will affect the preload torque. Again, special care is required for proper disassembly and reassembly!

With preloaded assemblies (screws types with prefix PRU, PRK, PVU and PVK), do not remove the retaining device used for transporation inside the packaging. The retaining device can be:

- Transportation bolts (usually 3 screws) for the flanged types PRK and PVK
- Retaining strap for the cylindrical types PRU and PVU (→ **fig. 39**). When removing the retaining strap, there is a high risk of dropping the preloading spacers and the key. Therefore, this operation should be performed at the last minute when pressing the nut into its housing

www.lmotion.ru lmotion-mail@ya.ru Тел.:(495) 921-34-60

Fig. 38

Roller screw on V–shaped supports

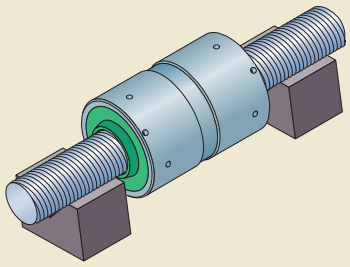

Fig. 39

Retaining strap

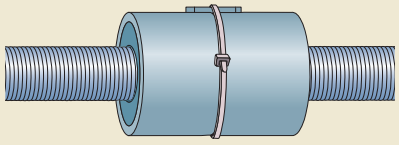

Fig. 40

Roller screw with wiper

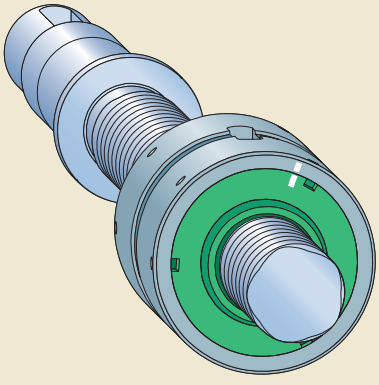

Fig. 41

Planetary roller screw

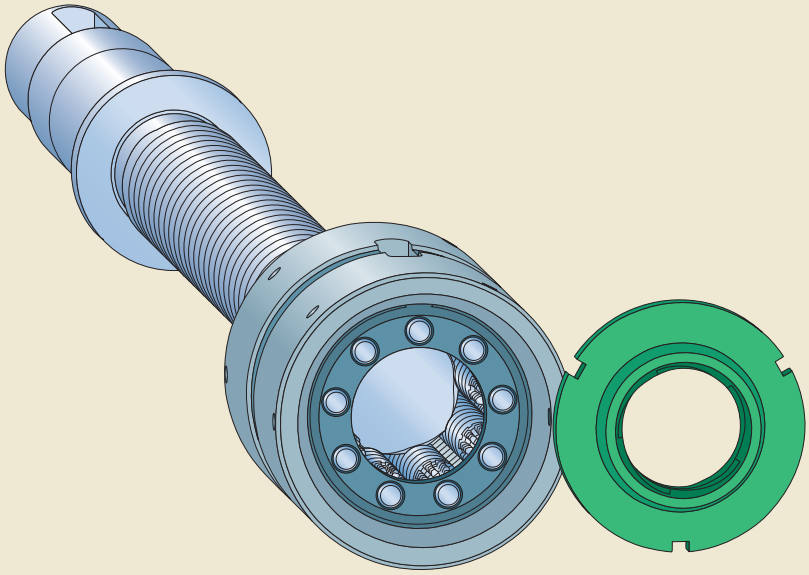

Fig. 42

Recirculating roller screw

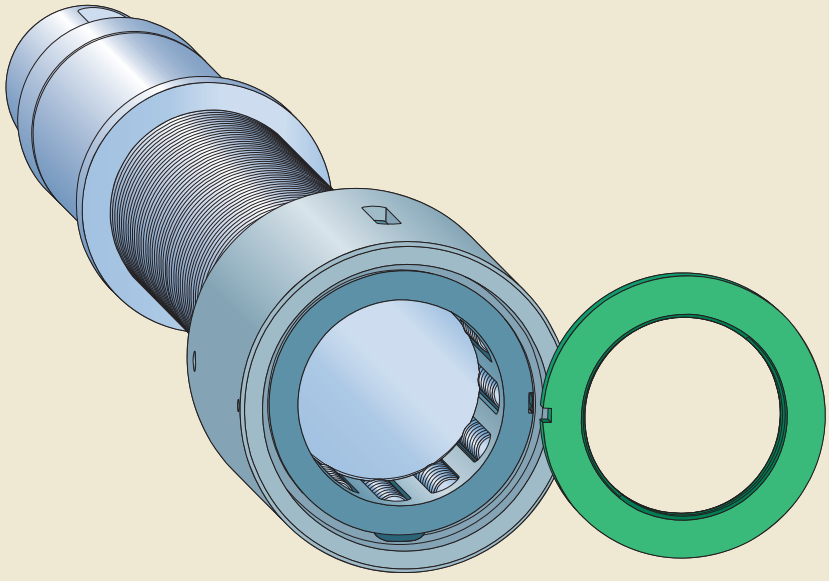

D

www.lmotion.ru lmotion-mail@ya.ru Тел.:(495) 921-34-60

Lubrication

The rust inhibitor is not a lubricant. For grease or oil lubrication, please refer to the *lubrication chapter* in this catalogue.

Starting up the screw

After the assembly has been cleaned, fitted and lubricated, allow the nut to make several full strokes at low speed (< 50 r/min) and under light load (not to exceed 5% of the roller screw dynamic load carrying capacity) in order to check the proper positioning of the limit switches or reversing mechanism. Then, normal load and speed can be applied.

Running in period

Non–preloaded roller screws will experience a running in process during the first hours of operation.

SKF recommends injecting half the volume of grease in the nut after running in, to renew the lubricant potentially contaminated by running in particles.

For preloaded roller screws, a running in of 20 000 revolutions is performed before delivery.

Monitoring screw life

At the end of the screw's service life, the following conditions become observable: Fatigue flaking, increase in axial play, deterioration of running behavior, increase in driving torque and increase in operating temperature. Also, lubricant becomes noticeably contaminated. These indicators are important methods of monitoring the condition of a roller screw. Immediate replacement is recommended at the end of the service life in order to avoid any damage to the installation.

Important:
Poor quality or lack of lubricant, abnormal stresses, misalignment and tilting, and operation outside defined specifications will increase operating temperature of the roller screw. Monitoring the operating temperature will help detect any irregularities.

Traceability

Each roller screw shaft and nut are identified by engraving with unique manufacturing order and serial number. Each screw's individual dimensional data, lead precision, axial play, preload torque, etc. are recorded and archived by SKF for a period of 10 years. This period can be enlarged for special applications.

Support bearings assembly

1 Check the direction of fitting (position of the flange) before fitting a FLRBU support bearing
2 If necessary, heat the FLRBU up to 80 °C with an SKF heater
3 Fit the FLRBU on the screw (check that it fits against the surface of the screw flange)
4 Prepare the KMT locknut and loosen the KMT locking screws one-quarter of a turn
5 Fit the KMT locknut:
   – Tighten to 1,5 times the tightening torque listed in the product table
   – Loosen the nut
   – Retighten the KMT locknut to the torque values listed in the product table and tighten the locking screws
6 Check the radial run-out of the machined end and mark the upper point
7 If the run-out is out of tolerance, loosen and retighten the radial locking screw which is closest to the previously marked upper point
8 Check the radial run-out again
9 Check the operation of the support bearing.

Recommendations for bolts used with flanged nuts

SKF recommends using bolts with steel quality that complies with ISO class 12.9.

Alignment

SKF linear guidance systems should be checked for proper alignment to avoid non–axial loading on the roller screw. If external linear guidance does not meet these requirements, we suggest mounting the roller screw nut on trunnions, or mounting the screw shaft on self–aligning bearings.

For assembly, SKF recommends the following procedure which applies to an assembly with a rotating shaft screw and stationary nut.

The linear guides must be correctly mounted according to recommendations for the selected guidance system.

Fig. 43

Support bearing assembly

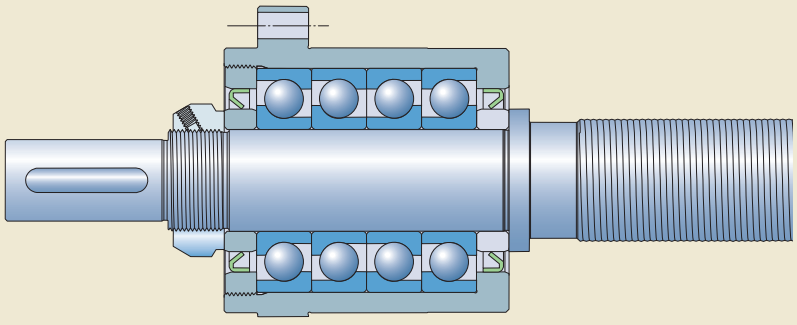

www.lmotion.ru lmotion-mail@ya.ru Тел.:(495) 921-34-60

1 Align the screw shaft with the linear guides

Align the support bearing housings with the guides to obtain parallelism of the screw shaft with respect to the linear guides.

The inclination of the support bearing axis versus the linear guide, in two perpendicular planes, must be less than 1/2 000 rad (0,03 °), the ideal target being 1/5 000 rad (0,011°) (→ **fig. 44**).

2 Align the nut housing with the linear guides

Align the roller screw nut housing with the axis of the linear guides to obtain parallelism of the nut axis with the linear guides.

The inclination must be less than 1/2 000 (0,03°), the ideal target being 1/5 000 (0,011°). These tolerances must be maintained under load (→ **fig. 45**).

3 Check the concentricity of the nut housing with the support bearings

SKF recommends checking that the nut housing is not off–centered versus the support bearings of the shaft. Otherwise, the excessive off–centered position of the nut housing would result in unacceptable radial loading on the roller screw.The radial eccentricity in two perpendicular planes must not exceed 0,02 mm between the nut housing bore diameter and the support bearings axis (→ **fig. 46**).

4 Check the axial run-out of the nut housing face versus the screw shaft axis (flanged nuts)

SKF recommends checking that the nut housing presents the appropriate perpendicularity to the roller screw axis to avoid the tilting of the screw nut and to avoid uneven loading along the rollers.

The axial run-out of the housing face must be (→ **fig. 47**):

- Lower than 0,015 mm for screws with $d_0 \leq 15$ mm
- Lower than 0,02 mm for screws with $15 < d_0 \leq 39$ mm
- Lower than 0,04 mm for screws with $d_0 > 39$ mm.

Fig. 44

Align the screw shaft with the linear guides

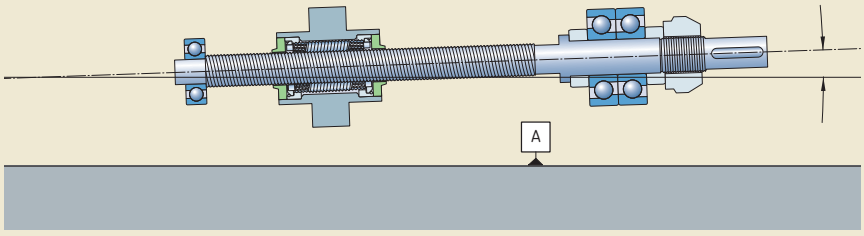

Fig. 45

Align the nut housing with the linear guides

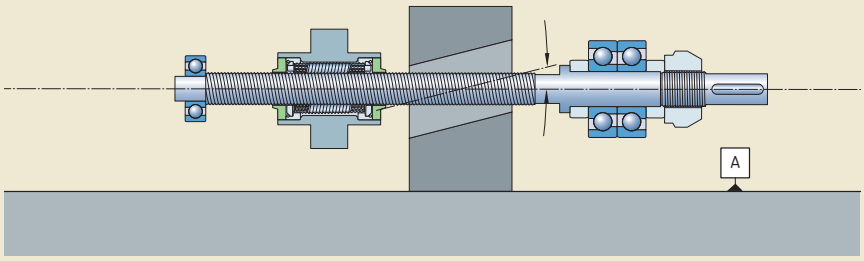

Fig. 46

Check the concentricity of the nut housing with the support bearings

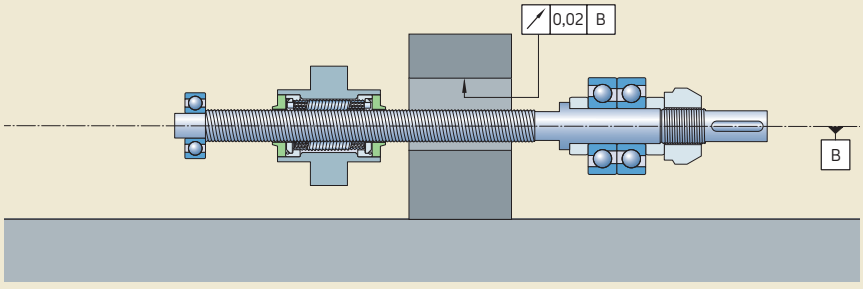

Fig. 47

Check the axial run-out of the nut housing face versus the screw shaft axis

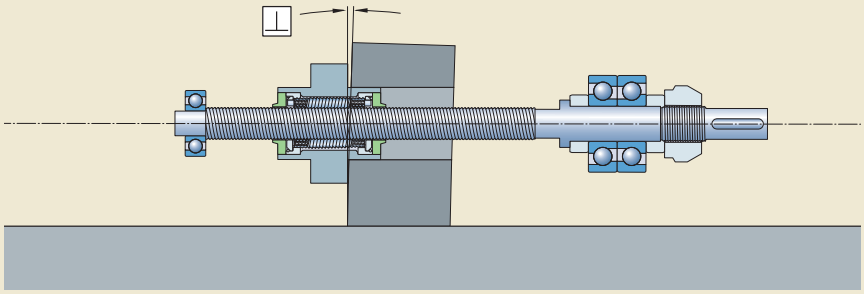

D

www.lmotion.ru lmotion-mail@ya.ru Тел.:(495) 921-34-60

Technical request form

Customer and project information

Company name[1) ....

Address ....

Contact name .... Phone number ....

Email .... Website ....

Project name .... Application type[1) ....

Customer is not a subsidiary or part of National Defense industry[1) I agree ☐

Application is not civil nuclear[1) I agree ☐

Application is civil[1) I agree ☐

Short description of the application[1) (Please attach a sketch)

....

....

....

Current technology used for similar application ....

Prototype requirements ....

Expected prototype delivery date ....

Annual roller screw requirements ....

Expected first delivery date ....

Preselection design parameters

Maximum stroke [mm] ....

Threaded length [mm] ....

Total screw shaft length [mm] ....

Screw type (planetary, inverted, rotating nut, recirculating) ....

....

Nut shape (cylindrical, centered flange, off–centered flange, split nut, double nut) ....

Preselection of screw shaft nominal diameter [mm] ....

Preselection of lead P_h [mm] ....

Lead precision grade according to ISO 3408 ....

Axial play (standard or specific), without backlash or with preload ....

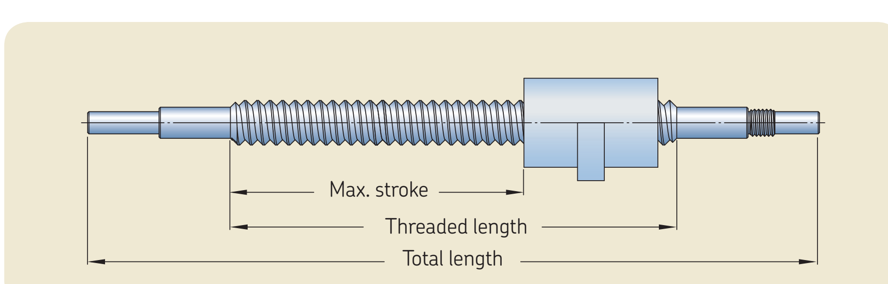

1) This information must be provided.

www.lmotion.ru lmotion-mail@ya.ru Тел.:(495) 921-34-60

Operating conditions

Environmental constraints

☐ Corrosive ☐ Polluted
☐ Vacuum ☐ Other

Operating temperature

Minimum. . . . . °C Maximum . . . . °C
Average. . . . . °C Ambient. . . . . °C

Lubrication

☐ Oil ☐ Grease
☐ Dry lubricant ☐ Specific lubrication needed
If lubricant is already selected
Brand name . . . .
Type . . . .
Viscosity at average operating temperature. . . . . Cst

Maximum loads, speed and acceleration

Maximum dynamic tension load . . . . N
Maximum dynamic compression load . . . . N
Maximum static or shock tension load. . . . . N
Maximum static or shock compression load . . . . N
Maximum linear speed . . . . m/min
Maximum acceleration . . . . .m/s^2

Service life

Stroke (1 cycle = 2 strokes). . . . . mm
Cycles/hour. . . . . Hours/day. . . . .
Days/year . . . . Years . . . .

Duty cycle description

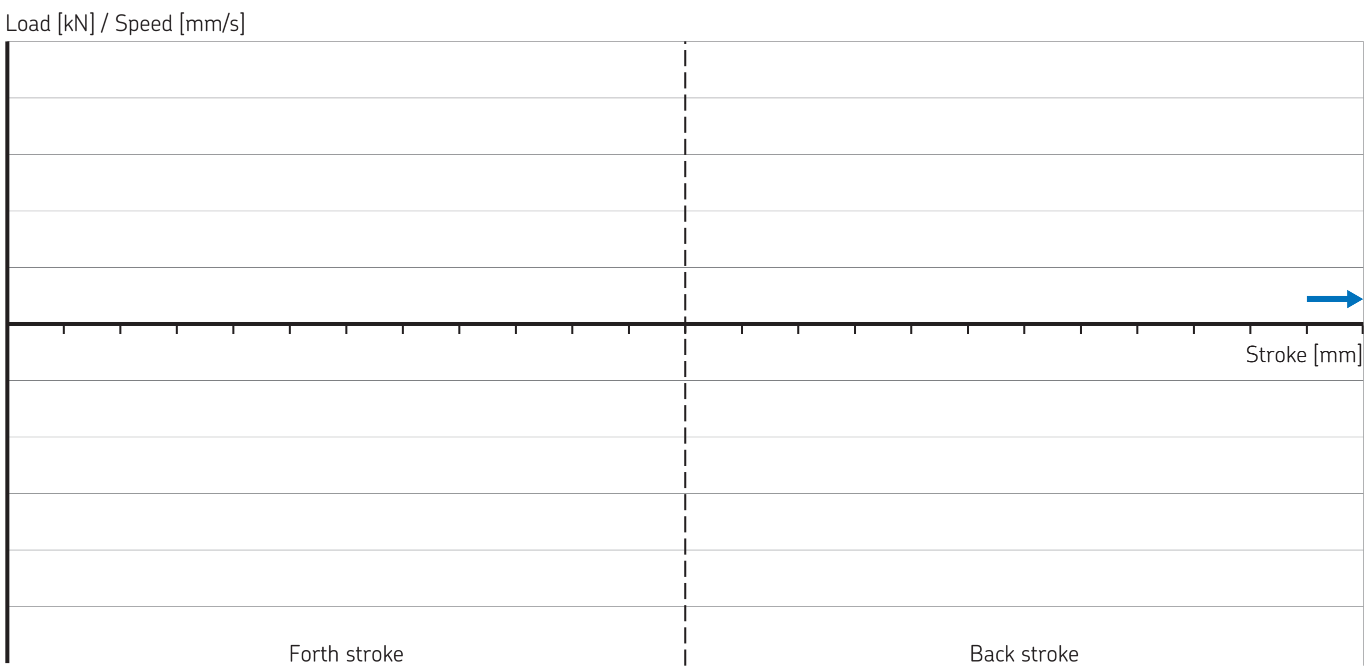

Mounting conditions

Position of the screw
☐ Vertical ☐ Horizontal
Rotating component
☐ Screw shaft ☐ Nut

Screw end mounting conditions
☐ ●●——— (fixed, free)
☐ ●●———● (fixed, radial support)
☐ ●●———●● (fixed, fixed)

Other pertinent information

. . . .
. . . .
. . . .

Roller screw catalogue, roller screw 2D prints and 3D models are available on *www.skf.com*
Please send inquiry form to your local SKF representative. For contact information, please visit *www.skf.com*

www.lmotion.ru lmotion-mail@ya.ru Тел.:(495) 921-34-60

Symbols

α	Helix angle of the thread	[°]
η	Theoretical direct efficiency	–
η'	Theoretical indirect efficiency	–
η_p	Practical direct efficiency	–
η'_p	Practical indirect efficiency	–
μ_{prac}	Practical coefficient of friction	–
μ_{ref}	Reference coefficient of friction	–
μ_s	Coefficient of friction when starting	–
σ	Nominal axial stress	[MPa]
σ_p	Real axial stress	[MPa]
σ_t	Total stress	[MPa]
τ	Nominal shear stress	[MPa]
τ_p	Real shear stress	[MPa]
B	Wiper overhang (protuding from nut length A)	[mm]
C_{0a}	Static load carrying capacity of a roller screw	[kN]
C_a	Dynamic load carrying capacity of a roller screw	[kN]
C_{req}	Required basic dynamic load carrying capacity	[kN]
D_0	Nominal nut diameter for an inverted roller screw	[mm]
D_2	Wiper outside diameter (= inner diameter of wiper recess)	[mm]
D_3	Wiper outside diameter in the plane of nut end face	[mm]
d_0	Nominal diameter of screw shaft	[mm]
d_1	Outside diameter of screw shaft	[mm]
d_2	Root diameter of screw shaft	[mm]
d_b	Bore diameter of a hollow screw shaft	[mm]
e	Depth of the keyway on shaft end machining	[mm]
F	Axial load	[N]
F_c	Buckling strength	[N]
F_m	Equivalent constant cubic mean axial load	[N]
F_{pr}	Internal preload force between a nut half (or a nut) and the shaft	[N]
F_q	Squeeze load applied to two nut halves (or two nuts) by the housing or by fixing bolts	[N]
f_1	Mounting factor for calculation of critical speed of screw shaft	–
f_3	Mounting factor for calculation of buckling strength of screw shaft	–
f_4	Stress concentration factor for shaft end calculation for torsional stress	–
f_5	Stress concentration factor for shaft end calculation for axial stress	–
g	Acceleration of gravity = 9,8 m/s^2	[m/s^2]
HRC	Rockwell hardness	HRC
HV	Vickers hardness	HV
I	Inertia	[kgm^2]
I_L	Inertia of load	[kgm^2]
I_M	Inertia of motor	[kgm^2]
I_{nn}	Inertia of a rotating nut	[kgmm^2]
I_{ns}	Inertia of rollers with rotating shaft	[kgmm^2]
I_s	Inertia of screw shaft per meter of shaft length	[kgmm^2/m]
K_F	Correction factor for basic relubrication interval to account for operating load	–
K_s	Basic relubrication interval related to maximum speed	[h]
K_T	Correction factor for basic relubrication interval to account for operating temperature	–
L	Length of stroke in a duty cycle	[mm]
L_{10}	L_{10} basic life rating, millions of revolutions	[10^6 revolutions]
L_{10h}	L_{10h} basic life rating, operating hours	[h]
L_n	Calculated life with reliability factor	[10^6 revolutions]
L_{tp}	Maximum total shaft length	[mm]

www.lmotion.ru lmotion-mail@ya.ru Тел.:(495) 921-34-60

l_0	Nominal travel: Nominal lead multiplied by the number of revolutions	[mm]
l_1	Threaded length	[mm]
l_{cr}	Free length, or distance between the two supports for shaft critical speed calculation	[mm]
l_{rs}	Length of roller set in an inverted roller screw	[mm]
m_L	Mass of the load	[kg]
m_n	Mass of the nut with standard number of rollers	[kg]
m_s	Mass of the screw shaft per meter	[kg/m]
n_{cr}	Critical speed	[r/min]
P	Power	[W]
P_h	Lead of a roller screw	[mm]
Q	Fixing hole for the grease fitting, or lubrication hole for cylindrical nuts	[mm]
R_n	Nut stiffness	[N/µm]
R_{ng}	Minimum nominal stiffness of a nut assembly	[N/µm]
R_{nr}	Reference nominal stiffness of a nut assembly	[N/µm]
R_s	Shaft stiffness	[N/µm]
R_t	Static axial stiffness of the roller screw assembly	[N/µm]
S	Maximum stroke for an inverted roller screw	[mm]
S_{ap}	Maximum axial play	[mm]
T	Input torque in steady state	[Nm]
T_b	Back-driving and braking torque	[Nm]
T_{be}	Torque without backlash	[Nm]
T_f	Torque from friction in support bearings, motor, seals, etc.	[Nm]
T_{pr}	Preload torque	[Nm]
T_t	Total driving torque	[Nm]
u	Angular position of lubrication hole on flanged nut	[°]
Z_0	Total grease quantity for the screw shaft and the nut	[cm^3]
Z_n	Grease quantity for the nut	[cm^3]
Z_s	Grease quantity for screw shaft	[cm^3]

www.lmotion.ru lmotion-mail@ya.ru Тел.:(495) 921-34-60

Electro–mechanical cylinders

The high performance electro–mechanical cylinders incorporate SKF planetary roller screws as the driving force. They are designed for long service life, high accelerations, high force applications and heavy duty cycles.

The modular Electro–Mechanical Cylinder (EMC) offers great design flexibility to cover a wide assortment of industrial applications.

Compact Electro–Mechanical Cylinders (CEMC) deliver a unique combination of design flexibility and powerful actuation within a compact package.

The new Light Electro–Mechanical Cylinders (LEMC) include standard components for greater availability and increased value associated with premium performance.

SKF electro–mechanical cylinders using roller screws expand the limits of linear actuators.

Application examples

- Factory automation
- Automotive assembly lines (welding, riveting, clinching, piercing, etc.)
- Industrial assembly
- Presses, forming processes
- Steel industry
- Test benches
- Simulators, hexapods

Design features	User benefits
Cylinders incorporating high performance planetary roller screws	Cylinders designed for industrial grade applications Suited for high duty cycle with usage rate over 70% Extremely durable and reliable
Roller screws with low axial play	Cylinders with high axial stiffness Increased process repeatability
Planetary roller screws with maximum speed n d_0 = 160 000, and acceleration up to 12 000 rad/s^2	High linear speeds up to 1,5 m/s and high accelerations for increased productivity
Premium SKF bearings supporting the rotary components	Same load carrying capacity in both directions
High mechanical efficiency	Low energy consumption and lower total cost of ownership (TCO)
Precise speed control and positioning accuracy	Flexible, functional, controllable
Modular design for the standard EMC assortment, with optional motor integration	Design flexibility to accomodate most custom installations
Efficient sealing	Cleanliness, low maintenance
Push tube guided on bushings fitted into the external housing for optimum rigidity and low vibration levels Internal bumpers Optional anti–rotation function for the push rod	Highly integrated system simplifying customer design and installation
Optional controller	Easy integration

www.lmotion.ru lmotion-mail@ya.ru Тел.:(495) 921-34-60

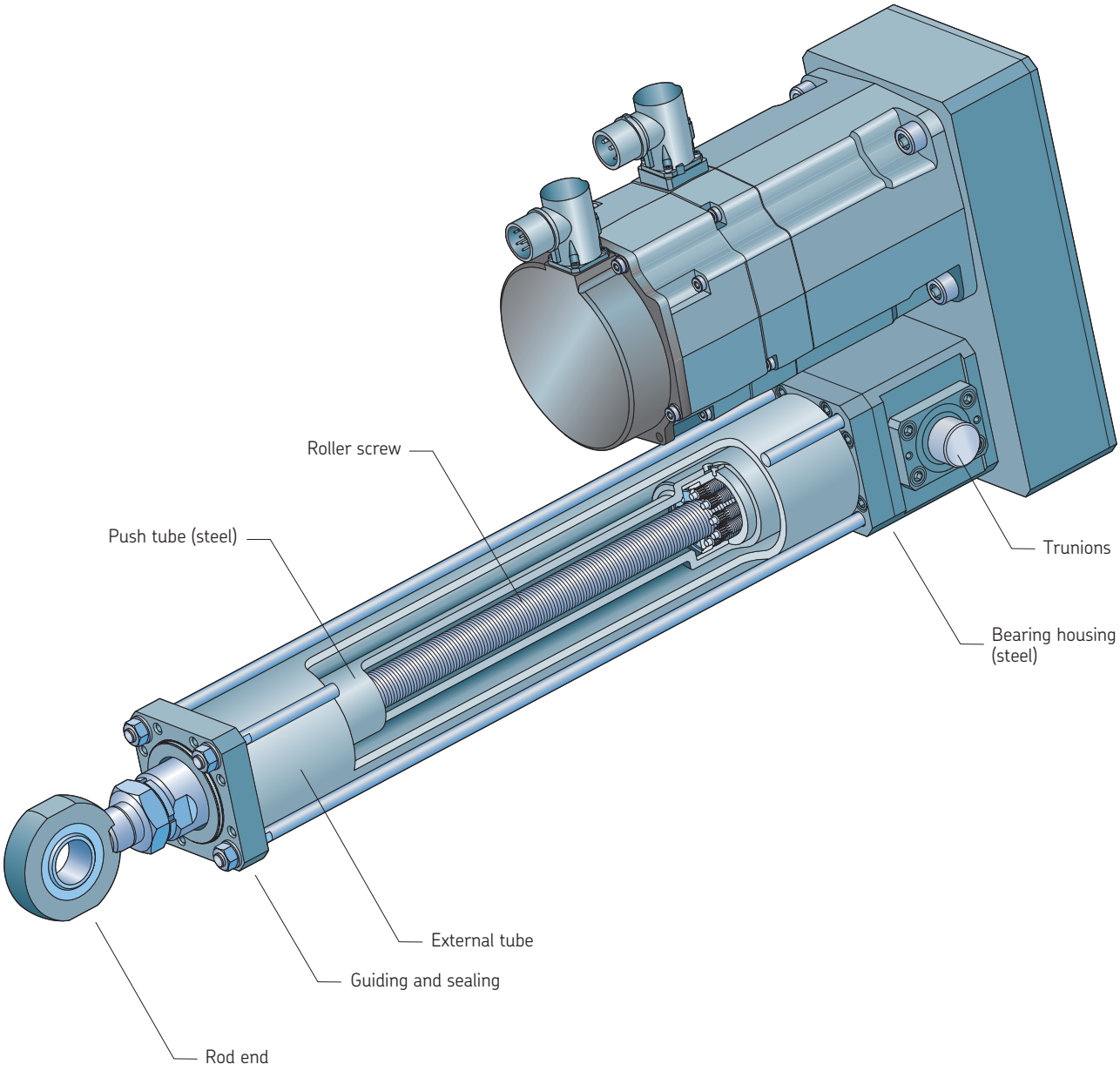

www.lmotion.ru lmotion-mail@ya.ru Тел.:(495) 921-34-60

Electro–mechanical cylinders

Modular Electro–Mechanical Cylinders (EMC)

- Modular design with or without motor
- In–line or parallel motor assembly
- Integrated anti–rotation push tube
- Programmable controller
- Internal bumpers
- Limit switches
- Integrated thermo sensor
- Automatic lubrication system
- Maximum load up to 450 kN
- Linear speed up to 1 500 mm/s
- Stroke up to 2 000 mm

Nominal diameter	Screw lead	Nominal force up to	Peak force up to [1) 2)]	Linear speed up to [3)]	Standard stroke [4)]	Dynamic load carrying capacity	Designation
mm	mm	kN		mm/s	mm	kN	–
25	5	41	82	333	0 to 400	63	**SRSA 2505**
	10	38	91	450	0 to 400	72	**SRSA 2510**
30	5	53	103	325	0 to 500	92	**SRSA 3005**
	10	50	97	650	0 to 500	106	**SRSA 3010**
39	5	63	123	325	0 to 800	129	**SRSA 3905**
	10	61	130	350	0 to 800	153	**SRSA 3910**
	15	62	142	650	0 to 800	168	**SRSA 3915**
48	5	107	248	278	0 to 1 000	198	**SRSA 4805**
	10	95	187	350	0 to 1 000	232	**SRSA 4810**
	15	103	202	413	0 to 1 000	258	**SRSA 4815**
	20	86	170	550	0 to 1 000	266	**SRSA 4820**
60	10	162	318	275	0 to 1 300	339	**SRSA 6010**
	15	162	319	463	0 to 1 300	373	**SRSA 6015**
	20	143	252	667	0 to 1 300	395	**SRSA 6020**
75	10	256	451	308	0 to 1 500	505	**SRSA 7510**
	15	240	271	500	0 to 1 500	561	**SRSA 7515**
	20	199	224	467	0 to 1 500	572	**SRSA 7520**
32	1	41	78	10	0 to 1 000	64	**SVSA 3201**
40	1	62	121	8	0 to 1 000	79	**SVSA 4001**
50	1	110	214	7	0 to 1 000	174	**SVSA 5001**
25	25	8	19	1500	0 to 500	23	**SLSA 2525**
40	40	12	19	1500	0 to 1 200	53	**SLSA 4040**

[1)] Peak force to be used during static phases only. During dynamic phases, the peak force must be limited through the motion controller to 80% of the dynamic load carrying capacity
[2)] Nominal force can be used 100% of the cycle time, at low speed (10% of the rated linear speed)
[3)] This is the maximum achievable linear speed, to be limited through the motion controller
[4)] For additional information about longer stroke, please contact your local SKF representative

www.lmotion.ru lmotion-mail@ya.ru Тел.:(495) 921-34-60

Compact Electro–Mechanical Cylinders (CEMC)

- Integrated brushless servomotor
- High power density
- Low weight for dynamic applications such as robotics
- Compactness
- Fail safe brake
- Programmable controller
- Integrated thermo sensor
- Automatic lubrication system
- Maximum load up to 83 kN
- Linear speed up to 480 mm/s
- Stroke up to 200 mm

Nominal diameter	Design	Screw lead	Nominal force[1)]	Peak force[2)]	Linear speed	Standard stroke	Dynamic load carrying capacity	Designation
mm			kN		mm/s	mm	kN	–
18	Compact	3,75	4,7	10,3	350	145	27	**CEMC1804–x2x**
24		4	8,7	23,8	300	Up to 200	61	**CEMC2404–x2x**
		6	5,8	15,9	450	Up to 125	61	**CEMC2406–x2x**
		4	13,1	26,0	300	Up to 200	61	**CEMC2404–x3x**
		6	8,7	17,3	450	Up to 125	61	**CEMC2406–x3x**
24	Ultra–compact	4	14,1	28,2	320	90	61	**CEMC2404–Dx2x**
		6	9,4	18,8	480	90	61	**CEMC2406–Dx2x**
30		4	39,5	83,4	266	170	105	**CEMC3004–Dx6x**
		6	26,3	55,6	400	170	105	**CEMC3006–Dx6x**

[1)] Nominal force can be used 100% of the cycle time, at low speed (1% of the rated linear speed)
[2)] Peak force represents the maximum force to be applied for short periods of time (1 second max.) at low linear speed and with the selected controller.

www.lmotion.ru lmotion-mail@ya.ru Тел.:(495) 921-34-60

Light Electro–Mechanical Cylinders (LEMC)

- Modular design with or without motor
- In–line or parallel motor assembly
- Integrated anti–rotation push tube
- Programmable controller
- Internal bumpers
- Limit switches
- Maximum load up to 80 kN
- Linear speed up to 1 000 mm/s
- Stroke up to 800 mm

Nominal diameter	Screw lead	Peak force	Linear speed	Standard stroke, by increments of 100 mm	Dynamic load carrying capacity	Designation
mm		kN	mm/s	mm	kN	–
21	5	40	500	100 to 600	51	**LEMC2105**
21	10	40	1000	100 to 600	54	**LEMC2110**
30	5	80	440	100 to 800	92	**LEMC3005**
30	10	80	880	100 to 800	106	**LEMC3010**

www.lmotion.ru lmotion-mail@ya.ru Тел.:(495) 921-34-60

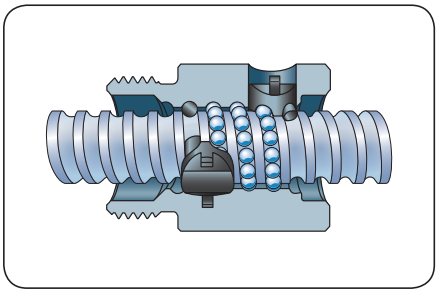

Precision rolled miniature ball screws
- *Precision rolled shaft associated with a compact nut design*
- *Diameter = **6** to **16** mm, lead = **2** to **12,7** mm*
- *Stainless steel assortment available*
- *High load carrying capacity within a compact envelope*
- *Available with axial play or without backlash*

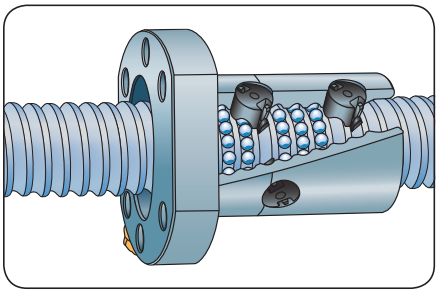

Precision rolled ball screws
- *Manufactured from SKF high precision rolling process, reaching G5 lead precision defined by ISO standards for ground ball screws*
- *Diameter = **16** to **63** mm, lead = **5** to **50** mm*
- *SX value assortment of universal screws ideally suited for transportation and material handling applications*
- *SN assortment and SND assortment (DIN 69051) of ground nuts for accurate positioning applications, at lower cost than ground ball screws*
- *SL long lead screws for high linear speed applications*
- *SLT rotating nuts when lower inertia is required*
- *Matching assortment of support bearings*

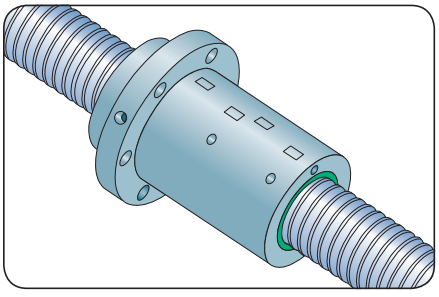

Ground ball screws
- *Metric assortment diameter = **16** to **180** mm, lead = **5** to **20** mm*
- *Inch assortment diameter = **0,5** to **6** in., lead = **0,1** to **1,75** in.*
- *Cylindrical flanged nuts and DIN nuts*
- *Available with axial play, without backlash, single nut with internal preload or preloaded double nut*
- *Matching assortment of support bearings*
- *Combination of high precision and high stiffness*
- *Custom solutions on request*

Linear ball bearings
- *The cost–efficient guidance system*
- *Dimensions according to ISO 10285 series 1 and 3, from nominal diameter **5** to **80** mm*
- *Closed and open designs, rigid and self–aligning designs. Integrated lubricant reservoir. Stainless steel option*
- *Wide assortment of accessories stocked at SKF such as linear ball bearing housings, ground shafts, shaft supports and shaft blocks*
- *Load carrying capacity and sealing performance optimized for maximum service life*

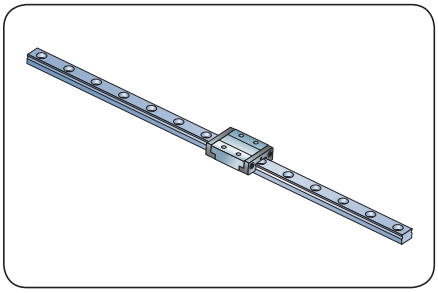

Miniature profile rail guides
- *The compact high precision profile rail guide for space saving and reduced machine weight*
- *Sizes **7** to **15** with interchangeability to DIN 645–2*
- *Standard width rail and larger rail for increased moment carrying capacity*
- *High precision ground raceways and carriages with two rows of balls offering high load carrying capacity in all four radial directions*
- *Stainless steel components and factory pre–lubrication for high reliability*

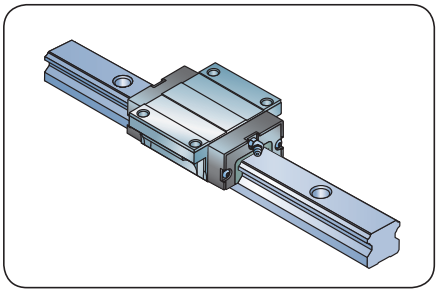

Profile rail guides
- *The ideal guidance system in combination with driving by precision rolled ball screws in most machinery*
- *Rail sizes **15** to **45** with interchangeability to DIN 645–1 and upcoming ISO 12090–1. Variety of carriage types manufactured according to industry standards*
- *High precision profile rail guide with precision ground raceways and carriages, available with various classes of precision and preload*
- *4 bearing raceways with X–arrangement providing equal load carrying capacity in all four radial directions, and ability to resist over–turning moments*
- *Accessories stocked at SKF such as low friction seals, scrapper seals, bellows, lubrication systems, etc.*
- *Solutions adapted to various types of applications and requirements*

www.lmotion.ru lmotion-mail@ya.ru Тел.:(495) 921-34-60

Designation system

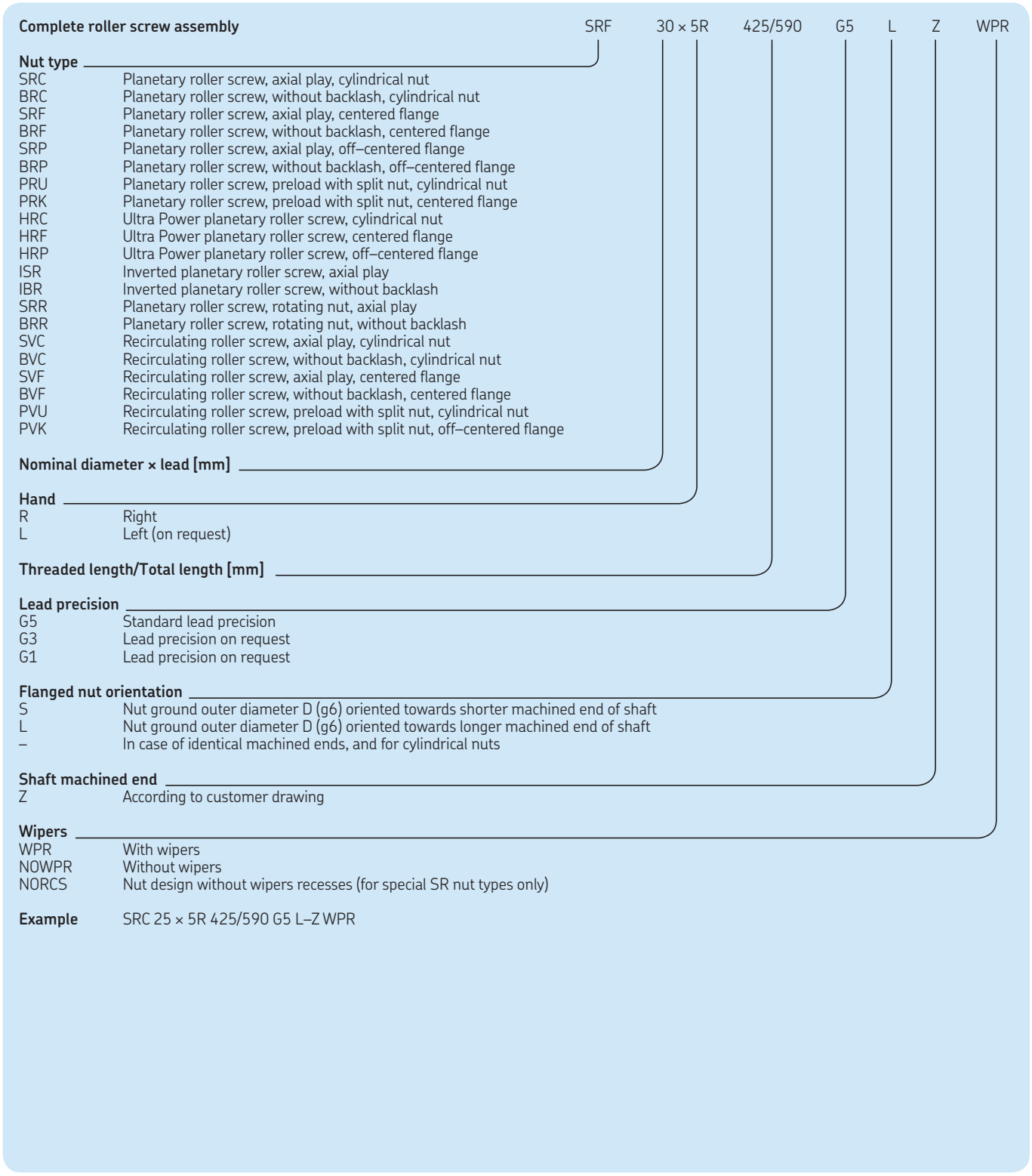

www.lmotion.ru lmotion-mail@ya.ru Тел.:(495) 921-34-60

Notes

www.lmotion.ru lmotion-mail@ya.ru Тел.:(495) 921-34-60

Notes

www.lmotion.ru lmotion-mail@ya.ru Тел.:(495) 921-34-60

Notes

www.lmotion.ru lmotion-mail@ya.ru Тел.:(495) 921-34-60

Notes

www.lmotion.ru lmotion-mail@ya.ru Тел.:(495) 921-34-60

skf.com